OROVILLE FERC RELICENSING
(PROJECT NO. 2100)

INTERIM REPORT
SP-F10, Task 4A

LITERATURE REVIEW OF DEVICES USED FOR ENUMERATION OF JUVENILE STEELHEAD (*ONCORHYNCHUS MYKISS*) OUTMIGRANTS

REVIEW DRAFT

PREPARED BY:

SWRI SURFACE WATER RESOURCES, INC.

Contact: Paul Bratovich or David Olson
Telephone: (916) 563-6360
E-mail: bratovich@swri.net or olson@swri.net

JANUARY 2003

OROVILLE FERC RELICENSING (PROJECT NO. 2100)

INTERIM REPORT (SP-F10, Task 4A)

LITERATURE REVIEW OF DEVICES USED FOR ENUMERATION OF JUVENILE STEELHEAD (ONCORHYNCHUS MYKISS) OUTMIGRANTS

TABLE OF CONTENTS

1.0 SUMMARY 1

2.0 PURPOSE 1

3.0 BACKGROUND 2

4.0 METHODOLOGY 5
- 4.1 Enumeration Methods and Devices 5
- 4.2 RST Efficiency Comparison 6
- 4.3 Potential RST Device Modification 7

5.0 RESULTS AND DISCUSSION 8
- 5.1 Comparison Of Enumeration Methods And Devices 8
  - 5.1.1 Hydroacoustic Sampling 8
  - 5.1.2 Videographic Monitoring 10
  - 5.1.3 Electronic Fish Counting 14
  - 5.1.4 Fyke Netting 16
  - 5.1.5 Inclined-Plane Trapping 19
  - 5.1.6 Inclined-Screen Trapping 23
  - 5.1.7 Trapping (RST) 26
  - 5.1.8 Seining 31
  - 5.1.9 Snorkeling 33
  - 5.1.10 Trawling 35
  - 5.1.11 Conclusions 38
- 5.2 RST Efficiency Comparisons 39
- 5.3 Potential RST Device Modification 42
  - 5.3.1 Physical Modifications 43
  - 5.3.2 Fish Behavior Modifications 47

6.0 CONCLUSIONS 49

7.0 REFERENCES 49

8.0 LIST OF PREPARERS 55

LIST OF FIGURES

Figure 1. Schematic diagram illustrating the components of acoustic hardware (Brandt 1996). 8

Figure 2. Camera monitoring system (Irvine et al. 1991). 11

Figure 3. Camera monitoring system (Hatch et al. 1994). 12

Figure 4. Electric fish counter (Appleby et al. 1991). 14

Figure 5. Commercially available electric fish counter (Smith-Root 2002). 15

Figure 6. Schematic diagram of a fyke net (Painter et al. 1975). 16
Figure 7. Photograph of fyke net with two fallen logs used to situate the floating device in the center of the streambed 17
(Milner et al. 1985). 17
Figure 8. Schematic diagram of an inclined-plane trap (Todd 1994). 20
Figure 9. Schematic diagram of an inclined-plane trap (Todd 1966). 20
Figure 10. Schematic diagram of an inclined-screen trap (DuBois et al. 1991). 23
Figure 11. Photograph of inclined-screen traps mounted on low-head dams (Lister et al. 1969). 24
Figure 12. Photograph of a rotary screw trap utilized on the Situk River, Alaska (Thedinga et al. 1994). 27
Figure 13. Photograph of the Thermalito rotary screw trap in the Feather River (pers. com., J. Kindopp, DWR, 2002). 27
Figure 14. Diagram depicting several seines including: (A) straight beach seine; (B) purse seine; (C) the setting of a purse seine in a one-boat systems; and (D) a lampara net (Hayes et al. 1996). 31
Figure 15. Photograph of divers conducting a snorkel survey (Dolloff et al. 1996). 34
Figure 16. Diagram of several types of bottom trawls: (A) beam trawl; (B) otter trawl; and (C) otter door (Hayes et al. 1996). 36
Figure 17. Diagram of several types of midwater trawls: (A) two-seam trawl; (B) four-seam trawl with pelagic otter doors; and (C) four-seam midwater trawl with large mesh webbing near trawl mouth (Hayes et al. 1996).....37
Figure 18. Photograph of rotary screw trap with fence-like, "V"-shaped diversion wings used to funnel fish towards the rotary screw trap (pers. com., J. F. Thedinga, NMFS, 2002). 43

LIST OF TABLES

Table 1. Comparison of rotary screw traps on several like river systems 40

1.0 SUMMARY

Devices used to enumerate outmigrating juvenile steelhead (*Oncorhynchus mykiss*), including acoustic devices, camera monitoring, electric fish counters, fyke nets, inclined plane traps, inclined screen traps, rotary screw traps, seining, snorkel surveys, and trawls, were researched through a review of published peer-reviewed journal articles, government agency reports, and consultant literature. A brief description of the device, a list of advantages and disadvantages associated with each device, a summary of several case studies involving use of the device, and conclusions regarding the applicability of the device for use in enumerating outmigrant juvenile steelhead in the Feather River was provided. The literature review concluded that rotary screw traps (RSTs) were the most suitable method for enumerating outmigrant juvenile steelhead in the Feather River.

RST efficiencies and site conditions in the Feather River were compared to RST efficiencies and site conditions on other comparable rivers, through a literature review, to determine whether Feather River RST efficiencies are similar to the efficiencies calculated for RSTs on other similar rivers. By comparing site conditions and RST efficiencies in the Feather River to those in other rivers, Feather River RST efficiencies were determined to be as high as, and in many cases higher than, RST efficiencies in other large rivers. Modifications to RSTs which have the potential to improve trap efficiencies, including diversion wings, ganged RSTs, multiple RSTs, and the use of behavioral modifications such as light and sound, were researched through a literature review. A description of the modification, a list of advantages and disadvantages of the modification, and a summary of case studies in which the modification had been applied was provided. The literature review concluded that no modifications to the existing RSTs for next year's field studies were recommended.

2.0 PURPOSE

The purpose of this literature review was to evaluate the current juvenile steelhead enumeration program and determine whether there were opportunities for improvement that would increase the accuracy and precision of estimates of the number of outmigrating juvenile steelhead in the Feather River. On March 19, 1998, naturally-spawned Central Valley steelhead (*O. mykiss*) were listed as threatened under the federal Endangered Species Act (ESA) by the National Marine Fisheries Service (NMFS) (NMFS 1998). The Central Valley Evolutionarily Significant Unit (ESU) includes all naturally-spawned populations of steelhead (and their progeny) in the Sacramento and San Joaquin Rivers and their tributaries, which includes the naturally-spawned steelhead in the Feather River (NMFS 1998). In order to evaluate potential relationships between project operations and ESA-listed steelhead, it is desirable to be able to quantify the number of outmigrating juvenile steelhead. This portion of Task 4A of SP-F10 is a literature review designed to evaluate the types of devices that could be used to enumerate outmigrating juvenile steelhead, and the applicability of each device to the Feather River.

In addition to the ESA, Section 4.51(f)(3) of 18 CFR requires reporting certain types of information in the Federal Energy Regulatory Commission (FERC) application for license of major hydropower projects, including a discussion of the fish, wildlife, and botanical resources in the vicinity of the project. The discussion is required to identify the potential impacts of the project on these resources, including a description of any anticipated continuing impact for on-

going and future operations. As a subtask of SP F-10, Task 4A fulfills a portion of the FERC application requirements by providing a literature review that supports evaluations of potential project effects on juvenile salmonids.

Currently, RSTs are used in the Feather River to enumerate outmigrating juvenile Chinook salmon and steelhead. In order to estimate the number of outmigrating juvenile Chinook salmon, mark-recapture studies are conducted approximately weekly in order to calculate the trapping efficiency of RSTs for juvenile Chinook salmon (DWR 2002b). Trap efficiencies are then used to expand the catch estimates in order to generate an estimate of the total number of juvenile Chinook salmon emigrants in the Feather River (DWR 2002b). However, not enough steelhead are captured in the RSTs to support weekly mark-recapture studies and, therefore, no quantitative estimate of the total number of juvenile steelhead emigrants in the Feather River exists (DWR 2002b). In an effort to improve the ability to estimate the total number of juvenile steelhead emigrants in the Feather River, a literature review was conducted to summarize information regarding alternative devices that could be used.

The literature review conducted to satisfy this portion of Task 4A of SP-F10 was designed to answer three questions and, as such, is divided into three sections. The first question addressed was whether RSTs are the most suitable device or method for enumerating juvenile steelhead in the Feather River. This question was addressed by compiling information regarding the advantages and disadvantages of each device and case studies involving the use of each device. The efficiency of alternative enumeration devices was described and the applicability of alternative enumeration devices to the Feather River was evaluated. The second question addressed was whether the capture efficiency of RSTs in the Feather River was comparable to capture efficiency of RSTs in other similar rivers. To this end, a literature review was conducted in which RST efficiencies and site conditions in the Feather River were compared to RST efficiencies and site conditions on other comparable rivers. The last question addressed was whether there were opportunities to modify the existing RSTs using either physical modifications or behavioral modifications, such as the use of light or sound, to increase trap efficiencies. A literature review of RST modifications was conducted and the applicability of the modifications to Feather River RSTs was evaluated. The conclusions drawn from this literature review may be used as the basis for suggesting potential PM&Es designed to increase trap efficiencies and provide a more rigorous estimate of the number of outmigrating juvenile steelhead.

3.0 BACKGROUND

The study area in which the results of the literature review could be applied includes the reach of the Feather River extending from the Fish Barrier Dam to Honcut Creek. This is the geographic range within the Feather River that encompasses currently used juvenile steelhead enumeration devices. The literature review compiled literature regarding advantages and disadvantages and case studies utilizing alternative enumeration devices and potential device modifications from rivers located throughout a wide geographic range of North America. For comparison of Feather River RST efficiencies to RST efficiencies in other rivers, literature from California rivers was utilized to the extent possible.

The reach of the Feather River extending from the Fish Barrier Dam to Honcut Creek is 23.25 river miles in length and consists of two distinct river segments. The upstream segment extends

from the Fish Barrier Dam at river mile (RM) 67.25 to the Thermalito Afterbay Outlet (RM 59). The river drops a total of 37 feet in this 8.25 mile-long segment, for a stream gradient of about 0.09 percent (DWR 1982). Flow in this reach is dictated by a 1983 agreement between the California Department of Water Resources (DWR) and the California Department of Fish and Game (DFG), which states that flow in this reach of the river is maintained at a constant flow of 600 cfs year-round (DWR 1983). In this reach, the river is characterized by shallow deposits of gravel at the bedrock channel bed, resulting in a channel containing coarse gravels and cobbles (DWR 1982; DWR 2001). This section of the river channel is confined by cobble levees that restrict overbank flooding and provide lateral channel control (DWR 2001). Because of the confinement within levees, this section of the river is generally less complex than the downstream segment, with fewer meanders and less area for channel migration (pers. com., B. Cavallo, DWR, 2002). Substrates in this segment are composed of relatively large elements with armoring due to transport of gravels downstream out of the area (Sommer et al. 2001).

The second river segment is the reach of the Feather River which extends from the Thermalito Afterbay Outlet (RM 59) downstream to the confluence with Honcut Creek, near Live Oak (RM 44). Stream gradient in this 15 mile-long segment is about 0.06 percent (DWR 1982). Flow in this downstream reach is also governed by the 1983 agreement between DWR and DFG, which sets the minimum flow requirements in the Feather River below the Thermalito Afterbay Outlet at 1,000 to 1,700 cfs depending on the runoff at Oroville and the time of year (DWR 1983). Typically, flows in this reach vary from the minimum flow requirement to 7,500 cfs (DWR 1982). In this reach, the river is not confined by levees over the entire reach and the channel bed and banks become more variable (DWR 1982; DWR 2001). The river flows through undisturbed older alluvium and floodplain deposits, and active erosion contributes to siltation of gravels downstream (DWR 1982; DWR 2001). Because the active channel in this reach is broader and wider than in the upper segment, more meanders and gravel bars occur in this reach (pers. com., B. Cavallo, DWR, 2002). The substrate in this segment of the Feather River tends to include relatively small gravel-sized particles transported from the upstream segment of the river (Sommer et al. 2001).

Juvenile steelhead emigrate downstream through the two reaches of the Feather River described above. Relatively little data exists regarding the residence and emigration timing of juvenile steelhead in the Feather River (DWR 2001). Data regarding juvenile steelhead emigration timing and abundance of juvenile steelhead emigrants has been obtained sporadically since 1963. The best available data relating to steelhead runs prior to construction of the Oroville Facilities consists of the 1963-1966 count at the Interim Fish Facility predating the Feather River Fish Hatchery (Painter et al. 1977). However, only adult steelhead were counted at the Interim Fish Facility and no information regarding the number of juvenile steelhead outmigrants was collected or reported. Following construction of the Oroville Facilities, DFG conducted eight years of extensive surveys of the Feather River fisheries resources designed to evaluate the effects of Oroville Facilities' operations on fish populations and fisheries (Painter et al. 1977). In order to investigate effects on the steelhead, DFG conducted a creel census survey of the steelhead fishery in the Feather River from 1972-1975 (Painter et al. 1977). However, this effort targeted adult steelhead and provided no information regarding emigration of juvenile steelhead. From 1968-1973, and again in the spring of 1975, fyke nets were used to sample emigrating juvenile salmon (Painter et al. 1977). The results of this investigation produced no information regarding the emigration timing or abundance of emigrating juvenile steelhead because, as Painter reports "*...during the seven years of our study, we neither saw any steelhead spawning in*

the river nor did we sample any steelhead fry that would have resulted from natural spawning" (Painter et al. 1975).

Recently, several sampling programs conducted by DWR have served to provide information regarding juvenile steelhead distribution and emigration timing, including the snorkel survey program, seining program, and RST monitoring of emigrating juvenile salmonids (DWR 2002a; DWR 2002b; DWR 2002c). Current snorkel surveys and seining efforts provide information regarding juvenile steelhead distribution and relative abundance, but do not provide specific information regarding emigration timing or estimates of the number of emigrating steelhead juveniles. Nonetheless, in combination with other methods such as data collection from RSTs, these surveys may provide useful information regarding the distribution of steelhead juveniles as they emigrate down the Feather River. Most observations of young-of-the-year (YOY) juvenile steelhead (less than 150 mm fork length) recorded during snorkel surveys were recorded in the reach of the Feather River extending from the Fish Barrier Dam to the Thermalito Afterbay Outlet (DWR 2002c). In fact, 91%, 77% and 84% of all the YOY juvenile steelhead (less than 100 mm fork length) observations during the snorkel surveys of 1999, 2000 and 2001, occurred one mile downstream of the Fish Barrier Dam, and only 1% of YOY steelhead were observed downstream of the Thermalito Afterbay Outlet (DWR 2002c). Additionally, during snorkel surveys occurring monthly from March through August, YOY steelhead were observed most frequently in April, May and June, with most observations recorded upstream of the Thermalito Afterbay Outlet (DWR 2002c).

Seining surveys conducted from 1998-2001 also provide information regarding spatial and temporal distribution of juvenile steelhead in the Feather River (DWR 2002a). Seining was conducted monthly from December through August from 1998-2001 (DWR 2002a). With regard to spatial distribution, steelhead catch in the seining surveys supported snorkel observations, with a majority of steelhead being caught in the reach upstream of the Thermalito Afterbay Outlet (DWR 2002a). Of the 404 steelhead caught over the study period, only 33 were caught at sampling locations downstream of the Thermalito Afterbay Outlet (DWR 2002a). Steelhead catch during seining was generally low, making it difficult to estimate temporal distribution and emigration timing of juvenile steelhead (DWR 2002a). In 1999, relative steelhead abundance appeared to peak in July, but no clear trend in emigration timing was discernable in either 2000 or 2001 (DWR 2002a). Fork length of steelhead caught in seining surveys during March and April of all years generally ranged from less than 25 to 50 mm (DWR 2002a). Steelhead caught in May and June generally exhibited larger sizes, with fork lengths ranging from 25 to 100 mm, while fish caught in July and August exhibited the largest sizes (greater than 200 mm fork length) (DWR 2002a). There was considerable variation in the size of steelhead juveniles caught by seining each month from 1999 - 2001 (DWR 2002a), and the periodic, high variability in fork length suggests that some older and larger (probably age-1) individuals were likely present throughout the study period (DWR 2002c).

Data describing juvenile steelhead emigration timing has been collected by DWR using RSTs in coordination with the juvenile Chinook salmon outmigrant enumeration program (DWR 2002b). As described in "Purpose", juvenile Chinook salmon are currently enumerated using RSTs (DWR 2002b). Weekly mark-recapture tests are conducted to estimate RST trap efficiency, and population estimates are then calculated by expanding RST catch estimates using trap efficiencies (DWR 2002b). Although too few steelhead were captured in the RSTs during 1999-2001 to support weekly mark-recapture studies and subsequent population estimates, RSTs do

provide additional information regarding juvenile steelhead emigration timing in the Feather River (DWR 2002b).

Two eight-foot RSTs were fished continuously from mid-November through June from 1998-2001. One RST is located near Live Oak (RM 42) and a second RST is located just upstream of the Thermalito Afterbay Outlet (RM 59.8) (DWR 2002b). The Live Oak trap is situated approximately 8 m from shore, in the middle of the thalweg. At the mouth of the trap, water velocity generally is about 3 fps. The Feather River is 52 m wide at the trap location and 2 m deep. The substrate is small-medium gravel. Bushes and small trees around the trap likely provide some cover (pers. com., J. Kindopp, DWR, 2002). The Thermalito trap is situated approximately 12 m from shore. At the mouth of the trap, water velocity generally is about 1.5 fps. The Feather River is 58 m wide at the trap location and generally about 2.5 m deep. The substrate is small-medium gravel. Some large woody debris is near the trap and other brush is nearby in the riffle upstream (pers. com., J. Kindopp, DWR, 2002).

The spatial and temporal distribution of steelhead suggested by RST captures supports data generated by snorkeling surveys and seining surveys. Most YOY steelhead captured in RSTs were caught at the Thermalito RST, with the Thermalito RST steelhead catch representing 98% of the total steelhead catch at both RSTs over the three-year study period (DWR 2002b). Most of the captured steelhead are newly emerged (approximately 25 mm fork length), with the average fork length of steelhead at the Thermalito RST measuring 25.5 mm ± 5.0 mm (DWR 2002b). Although fewer juvenile steelhead are captured at the Live Oak RST, the size of captured juvenile steelhead is larger and more variable, with fork length averaging 88.9 mm ± 81.8 mm. Little information regarding the distribution of yearling steelhead in the Feather River exists, with only four yearling steelhead captured during the three-year study period (DWR 2002b). All of the yearling steelhead captured were caught at the Live Oak RST (DWR 2002b). Steelhead catch occurred primarily in February and March over the study period, with peak emigration timing continuing until April in some years (DWR 2002b). Steelhead that remain in the river after April instead of emigrating as post-emergent fry may set up a "home-range" and rear until they become large enough to avoid capture by the RSTs, making it difficult to collect information regarding emigration timing of larger steelhead juveniles and supporting the need for additional sampling surveys such as snorkel surveys and seining in order to understand the emigration patterns of larger steelhead juveniles (DWR 2002c).

4.0 METHODOLOGY

As described in "Purpose", the literature review conducted to satisfy this portion of Task 4A of SP-F10 was designed to answer three questions and, as such, the methods are described in three separate sections.

4.1 ENUMERATION METHODS AND DEVICES

In order to evaluate whether RSTs are the most suitable device or method for enumerating juvenile steelhead in the Feather River, a literature review was conducted to compile information regarding alternative methods of enumerating emigrating juvenile steelhead. Material reviewed included peer-reviewed journal articles, consultant literature, and government agency reports and documents. Methods and devices evaluated included hydroacoustic devices, videography,

electronic fish counters, fyke nets, inclined plane traps, inclined screen traps, rotary screw traps, seining, snorkel surveys, and trawls. In addition to the devices and methods originally suggested in Task 4A, seining and acoustic devices also were summarized in this review. Seining was added because seining efforts are currently underway in the Feather River as described above, and hydroacoustic devices were added because of their widespread use for fish enumeration applications. For each alternative method or device evaluated, a brief description of each device including an account of how the device operates and a picture of the device was provided. Additionally, a list of advantages and disadvantages associated with the device as noted by researchers and biologists who have used the device was compiled. For each device or method evaluated, several case studies in which the device was utilized were summarized. Case study summaries generally included a site description, a description of the objective of the study, and a summary of device efficiency. Utilizing the information compiled about each device including the advantages, disadvantages and case studies, a discussion of each device's applicability for enumerating outmigrating juvenile steelhead in the Feather River was provided.

Although the aim of this review was to summarize devices and case studies in which outmigrating juvenile steelhead have been enumerated, information regarding the use of some devices for juvenile steelhead enumeration was not readily available. In cases where information regarding use of the device specifically to enumerate juvenile steelhead was sparse, information from studies enumerating other juvenile anadromous salmonids, such as Chinook salmon or coho salmon, was utilized. Additionally, it is clearly not within the scope of this task to provide a completely comprehensive review of all available case studies that have utilized these potential alternative enumeration devices. Therefore, a subset of case studies was taken from the literature in which the author discussed the advantages and disadvantages of using the device and where possible, studies which directly compared devices were included in case study summaries.

4.2 RST Efficiency Comparison

In order to evaluate whether the capture efficiency of RSTs in the Feather River was comparable to capture efficiencies of RSTs in other similar rivers, a literature review was conducted in which RST efficiencies and site conditions in the Feather River were compared to RST efficiencies and site conditions on other rivers. Materials reviewed included peer-reviewed journal articles, consultant literature, and government agency reports and documents. RST efficiencies and site conditions were summarized for the Feather River (California), the upper Sacramento River (California), the lower American River (California), the Stanislaus River (California), and the Situk River (Alaska). These rivers were chosen because they were of relatively comparable size and because, in most cases, RSTs have been used on these rivers to enumerate juvenile outmigrant salmonids over several years, offering a relatively long, consistent data series that allows assessment of the annual variation in RST efficiencies. Often, two RSTs were placed at different sites in each river and in such cases, site descriptions and RST efficiencies for both RSTs were included in this review. A summary table was constructed that lists RST sites along with their approximate location on the river as expressed in river miles (RM); site characteristics such as river width and flow; variations in trap description including trap size (diameter); placement (side-by-side or spaced apart); number of traps (single trap vs. multiple traps); and additional devices used in conjunction with the RSTs including sandbag walls or fences. Efficiency ranges and averages were provided in the summary table for each year of the study period. Where available, confidence intervals were included in the summary table to assist in the

interpretation of the efficiency data. A brief discussion comparing the efficiencies of the RSTs and site conditions on the rivers was provided. The average RST efficiencies and the standard deviations for RST devices located on comparably sized rivers were compared in order to evaluate whether the RST efficiency in the Feather River is similar to RST efficiencies on other rivers.

4.3 POTENTIAL RST DEVICE MODIFICATION

In order to evaluate whether there were opportunities to increase trap efficiencies by modifying the two existing Feather River RSTs, information regarding potential device modifications was gathered from the literature. Materials reviewed included peer-reviewed journal articles, consultant literature, and government agency reports and documents. Two types of device modifications were considered in this review. The first type of modifications considered were physical modifications, which included modifications to the RST itself or to the configuration of RSTs. The physical modifications considered in this review include diversion wings, ganged RSTs, and multiple RSTs. A literature review of RST modifications was conducted and for each potential modification, a list of advantages and disadvantages was provided. Additionally, summaries of relevant case studies that had employed the modification and summaries of the findings regarding use of the modification and resultant trap efficiencies were included. A subset of case studies was chosen for inclusion in this review based on the characterization of the advantages and disadvantages of the device utilized and the information provided regarding the potential utility of the modification.

The second type of modification considered was behavioral modification. Potential behavioral modifications included the use of sound or light as a method of attracting fish to the RST. Unlike the physical modifications reviewed, which have been employed in other studies, specific modifications designed to increase RST efficiencies based on fish behavior have not been employed to the best of our knowledge. As a result, the use of sound and light as attractants at facilities such as fish ladders was examined though a literature review in order to assess whether or not the use of sound or light provided a potential mechanism for increasing RST efficiencies. Studies focusing on fish response to sound and light were reviewed and summarized. In some cases, information regarding steelhead-specific response to sound and light was not readily available and therefore studies researching the response of other salmonids or other fish to sound and light were included in this review. Additionally, available literature regarding the general use of behavioral devices for fisheries purposes was summarized. Conclusions drawn from this literature review of potential physical and behavioral RST modifications may be used as the basis for suggesting potential PM&Es designed to increase trap efficiencies and provide a more rigorous estimate of the number of outmigrating juvenile steelhead.

5.0 RESULTS AND DISCUSSION

5.1 COMPARISON OF ENUMERATION METHODS AND DEVICES

5.1.1 Hydroacoustic Sampling

Description

Fisheries acoustics is the use of transmitted sound to detect fish. Sound is transmitted into the water as a pulse; and, as the sound pulse travels through the water it encounters targets, such as fish, that reflect sound back to the source. These echoes provide information on fish size, location and abundance. A transducer, a pressure-sensitive device, is used for sound transmission and echo reception. The transducer is submerged underwater and converts an electric pulse into sound pressure, which is transmitted through the water as a wave that spreads outward in a spherical pattern. An echo is produced by an object in the water having a density different from that of the water. Fish are good acoustic targets because their swim bladders have a high-density contrast with the water. The transducer receives the produced echo, which is then converted into electrical voltages and digitized for data recording and analyses. The time between the sound transmission and echo reception and the size of the echo provides the information regarding fish size and abundance (Brandt 1996) (Figure 1).

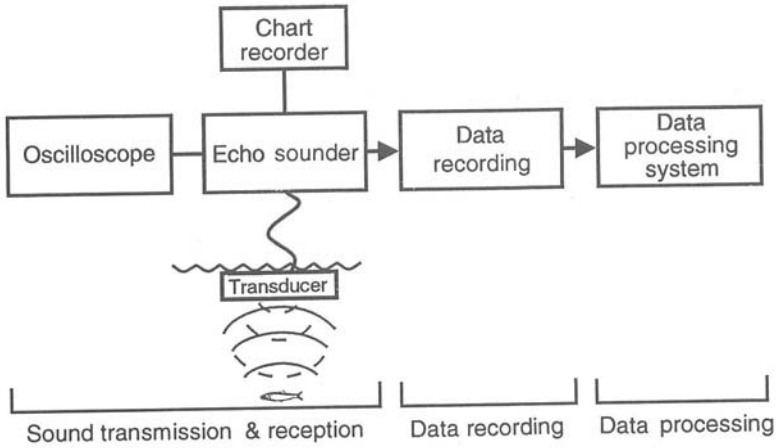

Figure 1. Schematic diagram illustrating the components of acoustic hardware (Brandt 1996).

Advantages

- Provides the ability to see and count what is under the surface of the water without disturbing the environment (Brandt 1996)
- Can sample the entire water column quickly, and detailed maps of fish densities and mean sizes can be obtained over large bodies of water (Brandt 1996)
- Alleviates many of the sampling problems created by the spatial patchiness of fish and are particularly well suited for assessment of midwater fish (Brandt 1996)
- Can continuously monitor fish abundances and movements across a particular volume of water if transducer is mounted permanently in one location. The high rate of sampling makes acoustic techniques cost effective and contributes to low variance (Brandt 1996)
- Acoustic techniques are unobtrusive in that fish are not harmed or interfered with when sampled. There is also little avoidance of the acoustic signal by fishes (Brandt 1996)

- Data collection is rapid and a higher proportion of the surface area is sampled. Because more surface area is encompassed by a sample, there tends to be less variation in density estimates across acoustic transects (Yule 2000)
- Acoustic surveys are less expensive than creel surveys (Yule 2000)

Disadvantages

- Primary and traditional application of hydroacoustics is for fish stock assessment, not for direct species identification (MacLennan D.N. et al. 1992)
- Cannot directly identify fish (Brandt 1996)
- Cannot easily sample all parts of the aquatic environment. Fish that are near the surface or within about 0.5 m of the bottom of the water column cannot be easily detected. Thus, the proportion of the water column that can be sampled decreases in shallow water environments (Unger et al. 1989). The maximum depth at which a fish can be detected is also limited because sound loses energy as is travels in water (Brandt 1996)
- Requires trained personnel to operate acoustic hardware and evaluate acoustic data; and, such training and experience are rarely available at academic institutions (Brandt 1996)
- Cannot detect fish in the near field of the transducer (about 1 m) or within 0.1 m from the bottom (Hartman et al. 2000)
- Acoustic estimates of surface-oriented fish gathered by downlooking transducers can be biased and lack precision because of limited sample volume near the apex of the cone (Yule 2000)
- Side-looking acoustics cannot discern modes in length frequency distributions unless large differences in length-classes exist (Yule 2000)
- Low signal-to-noise ratios, fish orientation near acoustic boundaries, and non-uniform bottom contours all affect the acoustic detectability of passing fish in a riverine environment (Daum et al. 1998)

Examples

Hartman et al. 2000: The objective of the study was to improve the confidence related to collecting and using hydroacoustic data for management decisions through comparing estimates of abundance and size structure of fish in the same water mass derived from using hydroacoustics and a rotenone survey. The study was conducted in fall 1997 and 1998 in lock chambers of the Ohio River. Species composition varied somewhat between lock chambers, but was made up mostly of four species and an assemblage of various minnow and shiner species. Hydroacoustic studies were conducted using a split-beam, downward-looking mobile system. The transducer was towed alongside the research boat at a speed of about 1.2 m/s. Abundance estimates and size distributions for each method were compared using correlation, regression and t-tests (significance levels were set to 0.05). Comparisons of the size distributions of fish showed significant differences between the methods, but peak modes for both methods occurred at the same range (75-99 mm) (Hartman et al. 2000).

Yule 2000: The objective of the study was to determine if horizontal acoustic estimates of salmonid densities and mean lengths were correlated with data collected simultaneously with a 9.1-m purse-seine. Fourteen surveys were conducted between June and September 1997 and

1999 on nine reservoirs and two natural lakes in Wyoming. All waters were managed as rainbow trout or cutthroat trout fisheries. Sampling was conducted using two split-beam transducers lowered by pole mount to a depth of 0.5 m on the port side of a boat, traveling at a speed of 1.0 to 1.2 m/s. Side-looking acoustics and purse-seine estimates of salmonid densities were correlated (r=0.87, N=14) across the range of densities encountered (0.4-81.2 fish/ha). Side-looking estimates of mean salmonid lengths were within 50 mm of mean lengths captured by purse-seine in 9 of 11 cases (Yule 2000).

Daum et al. 1998: This study used fixed-location, split-beam hydroacoustics to describe the temporal and spatial patterns of fall chum salmon in the Chandalar River, a tributary of the Yukon River in Alaska. Data was collected continuously from August 8 to September 22, 1996. During the 1996 season, river width averaged 128 m (ranging from 121 to 147 m) and maximum depth averaged 3.5 m (ranging from 3.2 to 4.4 m). It was assumed that all upstream swimming fish were chum salmon, based on five previous seasons of gill-net catches consisting of more than 99 percent chum salmon. For the season, over 2,160 hours of acoustic data were collected, and 204,153 upstream migrating chum salmon were tracked. Split-beam hydroacoustics provided counts of fish passage, fixed-location, directional assignments (upstream or downstream) to individually tracked fish, and served as an accurate, nonintrusive method for quantifying fish swimming behavior (Daum et al. 1998).

Applicability to the Feather River

The primary and traditional application of hydroacoustics is for fish stock assessment, not for direct species identification (MacLennan D.N. et al. 1992). In each of the case studies discussed above, researchers were familiar with the fish species present in the water body and did not use hydroacoustics for direct identification. In the Feather River, it is important to be able to quantify the number of outmigrating juvenile steelhead and Chinook salmon. Because hydroacoustics cannot dependably differentiate between outmigrating juvenile steelhead and other outmigrating juveniles, such as Chinook salmon, it would not be a useful device for specifically enumerating outmigrating juvenile steelhead. Additionally, length frequency distributions are not discernable unless a large difference in length-class exists and as one case study exemplifies, mean salmonid length estimates varied by as much or more than 50mm from length estimates obtained using seines. As a result, the accuracy of length frequency information obtained through RST captures, which is derived from direct measurements, is likely to be more accurate than measurements obtained using hyrdoaccoustics. Because of the disadvantages summarized above and the limitations suggested in the case study example, hydroacoustics would not be expected to provide a more accurate, precise, or consistent estimation of the number of emigrating juvenile steelhead in the mainstem Feather River than the currently utilized RSTs.

5.1.2 Videographic Monitoring

Description

Videographic monitoring involves setting up video camera(s) to record fish migration. Cameras may be installed overhead, or to the side of the fish ladder. Also, they may be housed in a protective box or set up on a tripod behind a window/screen. Often, several operators are needed

to review the tapes and check for accuracy. The figures below illustrate two camera monitoring systems (**Figure 2** and **Figure 3**).

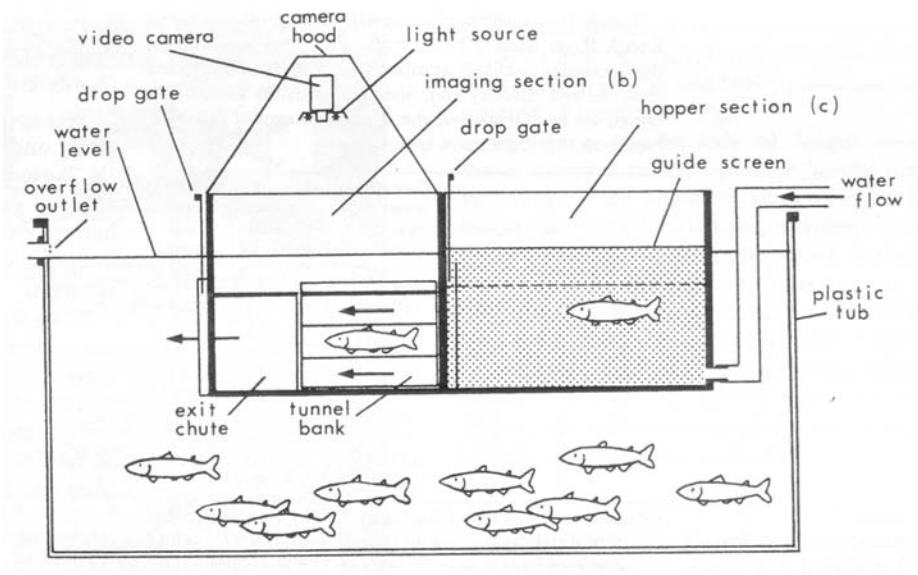

Figure 2. Camera monitoring system (Irvine et al. 1991).

Advantages

- Provides increased accuracy of measurements (i.e., population)(Hatch et al. 1994; Irvine et al. 1991; Miyamoto et al. 2001)
- Offers potential savings in time and money (Irvine et al. 1991)
- Reduces stress to fish as handling and obstruction of passage are eliminated (Irvine et al. 1991; Newcomb et al. 1997)
- Creates permanent records (Hatch et al. 1994; Irvine et al. 1991)
- Consists of low labor requirements (i.e., many stations can be operated by one individual) (Newcomb et al. 1997)
- Can be used in remote locations, though need to provide electricity (Newcomb et al. 1997)
- Includes relatively inexpensive equipment (Hatch et al. 1994) especially as videographic technology advances (Newcomb et al. 1997)

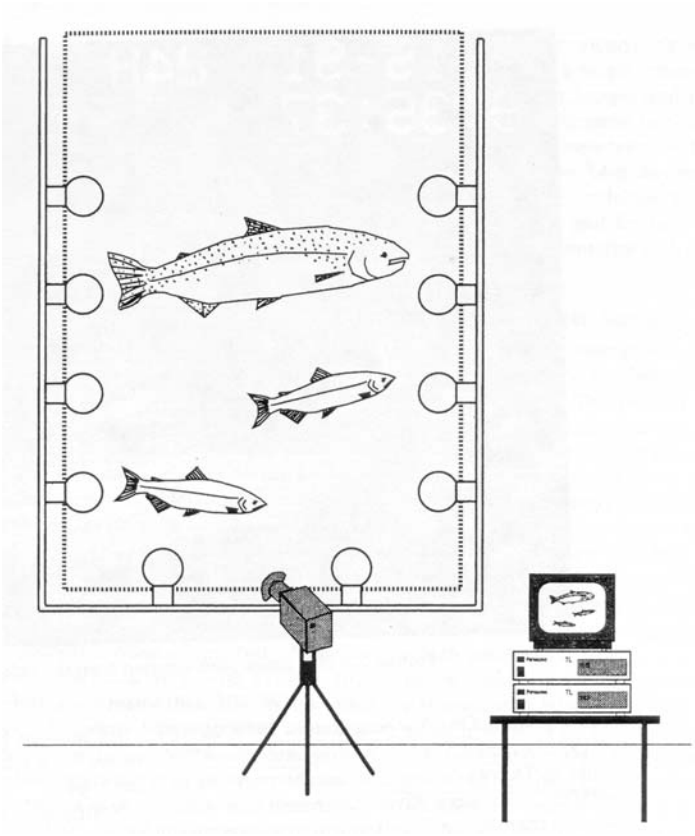

Figure 3. Camera monitoring system (Hatch et al. 1994).

Disadvantages

- Devise is most accurate when dealing with a small sample of fish that are of the same species and relatively the same size (Irvine et al. 1991)
- In order to get the maximum utility, fish must pass through a small, constricted area. This method is typically best utilized on small streams or in rivers in which the fish are routed through a narrow corridor, such as a weir
- Requires additional trapping effort when more than one species is present and turbidity of the water can hamper observations (Newcomb et al. 1997)
- Review of the videotapes can be somewhat labor-intensive (Newcomb et al. 1997)
- Device accuracy may decrease with higher turbidity levels (Hatch et al. 1994)
- Requires the use of additional lighting sources (Hatch et al. 1994; Irvine et al. 1991; Miyamoto et al. 2001; Newcomb et al. 1997)

Examples

Irvine et al. 1991: On the Keogh River in British Columbia, known numbers of coho salmon smolts were counted and measured by a prototype of a computerized video camera in May 1988. Coho salmon smolts were captured at a fish-enumeration fence and placed in holding boxes before being anesthesized and counted. Next, the smolts were added by dip net to a plastic tub

and directed to the tunnel entrance of a suspended plywood box (where an overhead camera recorded their movements). A microcomputer interpreted the tapes, which were then reviewed by an operator, who checked for accuracy and incorporated expansion factors. These expansion factors were obtained by taking the ratio between the known number of fish and the computer-generated estimate for each segment of tape, and determining the mean of these estimates. Findings revealed that the average computer-generated estimate was 25% less than the known number. The authors hypothesized that this may have resulted from fish overlapping in the tunnel and the computer registering this as a single fish, when in fact there were several fish. After incorporating expansion factors, however, estimates of the number of fish were on average only 6.4% from the known number (Irvine et al. 1991).

Newcomb and Coon 1997: During May and June from 1993 through 1996, Newcomb and Coon surveyed steelhead smolts at a lamprey weir on the Betsie River (a tributary to Lake Michigan), utilizing visual observation and time-lapse videography. From 1993-1996, visual observation was conducted by two observers counting smolts as they passed over the weir for 20 minutes of each hour from 9pm to 5am. For each night of observation, a 20-minute sample was calculated and multiplied by 24 to determine a nightly estimate. Data obtained from the visual observations was later compared with that obtained from camera monitoring. In 1995 and 1996, time-lapse videography was primarily used. The study site was relatively remote, so the team had to supply additional lighting in order to monitor migration at night using time-lapse videography. Tapes were later reviewed by three observers. The accuracy of manual tape counts was estimated by taking a random sample of one 30-minute period per time block to have a second reviewer manually recount the number of fish. Estimates of the number of smolts using 20-minute observations and camera monitoring are as follows:

	All Steelhead Smolts	**Wild Steelhead Smolts**
20-minute Observations		
1995	7,120 ± 1,282	1,709 ±308
1996	2,198 ± 512	1,143 ± 266
Camera Monitoring		
1995	5,259 ± 3,328	1,262 ± 799
1996	2,328 ± 1,249	1,211 ± 649

The authors concluded that smolt numbers obtained from camera monitoring were similar to those obtained from direct observation (Newcomb et al. 1997).

Applicability to the Feather River

Camera monitoring is likely to provide accurate estimates of the number of fish passing a specific point in areas where fish are constricted and required to pass through a narrow opening, such as a fish ladder. Enumeration studies conducted using smolts in controlled settings (Irvine et al. 1991) or at a weir, which offers a relatively constricted passage within which to operate a monitoring camera (Newcomb et al. 1997), suggest that camera monitoring in relatively controlled settings produces enumeration estimates comparable to those achieved by direct observation (Irvine et al. 1991; Newcomb et al. 1997). However, a large river with no weir to constrict the area of fish passage, such as the Feather River, does not provide the physical site conditions (narrow passage way through which fish pass during outmigration) that are described

in case studies in which camera monitoring has been shown to be relatively effective (i.e., hatchery ladders, weirs, or controlled laboratory environments). The decreased efficiency of camera monitoring noted under low-light conditions and under turbid conditions makes this method additionally difficult to apply to the Feather River. Lights would be required to monitor emigration occurring at night when most outmigration is generally considered to occur, and lights may affect fish behavior and movement, potentially resulting in artificial distribution of fish in the river and subsequently biased enumeration results. Because of the disadvantages summarized above and the drawbacks suggested in the case study examples, including the lack of constriction points in the Feather River, camera monitoring would not be expected to provide a more accurate, precise, or consistent estimation of the number of emigrating juvenile steelhead in the mainstem Feather River than the currently utilized RSTs.

5.1.3 Electronic Fish Counting

Description

Appleby and Tipping's (Appleby et al. 1991) electric counter consisted of a counting head, electronics package, and a battery. The counting head had many tunnels for the fish to pass through. These tunnels were constructed relative to the size of the fish to be enumerated. Additionally, the counting head was custom-made to fit a specific location. As each fish passed through the tunnel, the equipment registered the imbalance as a count. Fish counters are now commercially available as shown in Figure 5. The figures below illustrate two electric fish counters (**Figure 4** and **Figure 5**).

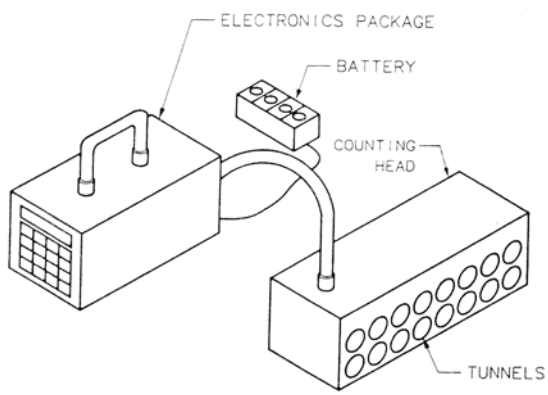

Figure 4. Electronic fish counter (Appleby et al. 1991).

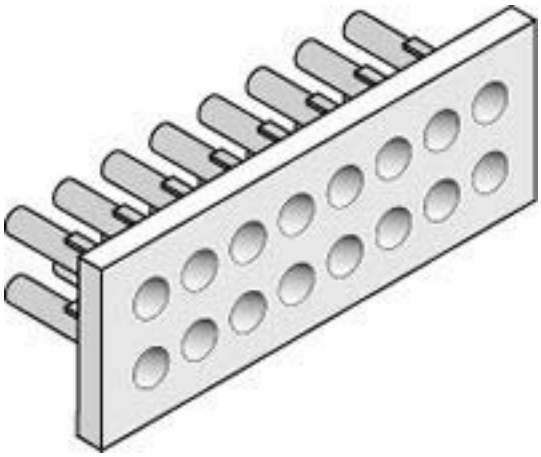

Figure 5. Commercially available electronic fish counter (Smith-Root 2002).

Advantages

- Produces accurate fish counts (Appleby et al. 1991)
- Is less stressful to fish (Appleby et al. 1991)
- Requires fewer personnel than manual counting (Appleby et al. 1991)

Disadvantages

- Requires fish to pass through constricted area (Appleby et al. 1991)
- Is most accurate when fish are of a uniform length (Appleby et al. 1991)
- Needs head differential of 15-30 cm passing over the counting head to provide adequate water velocities in the tunnels (Appleby et al. 1991)
- Does not allow for fish measurements to be taken

Examples

Appleby and Tipping 1991: – At a Washington hatchery, Chinook, coho, steelhead, and sea-run cutthroat trout smolts were surveyed. Two different counting heads were used as each was designed for different sized fish and direction of migration. Efficiency was measured by manually counting the same fish that passed through the electronic counter. The one-way mode device was within 3.0% of manual counts, averaging less than 1.5% with a deviation of 7.6%. The two-way mode was within 1.4% and averaged within 0.4% (Appleby et al. 1991).

Applicability to the Feather River

Although electric fish counters are clearly accurate and precise with respect to recording the number of fish coming through the fish counting tunnel, their maximum utility is primarily achieved when used in narrow passage corridors such as fish ladders. The utility of electric fish counters for field application is minimal in theory for several reasons. Tunnels through which fish must pass to be counted are of fixed size, which has minimal utility with respect to enumeration of outmigrating juvenile steelhead, which exhibit a range of sizes. Additionally, differentiation of outmigrating juvenile steelhead from other outmigrating juveniles, such as

Chinook salmon, would not be possible using this method. Although there are other potential disadvantages to using electric fish counters, such as the inability to cover a large cross-sectional area of a large river, the inability to differentiate juvenile steelhead from other outmigrating juveniles, and the inability to accommodate a range of sizes, renders electric fish counters impractical for the purpose of enumerating outmigrating juvenile steelhead in the Feather River. Because of the disadvantages summarized above and the drawbacks suggested in the case study example, electric fish counters would not be expected to provide a more accurate, precise, or consistent estimation of the number of emigrating juvenile steelhead in the mainstem Feather River than the currently utilized RSTs.

5.1.4 Fyke Netting

Description

A fyke net is a small cone-shaped net with a livebox attached to the back. Fish are conveyed into the fyke net and are held in the livebox. Fyke nets are generally secured to the streambed, in shallow water. Large mesh nets can sample larger fish, while small mesh nets sample smaller fish. The figures below illustrate two fyke nets (**Figure 6** and **Figure 7**).

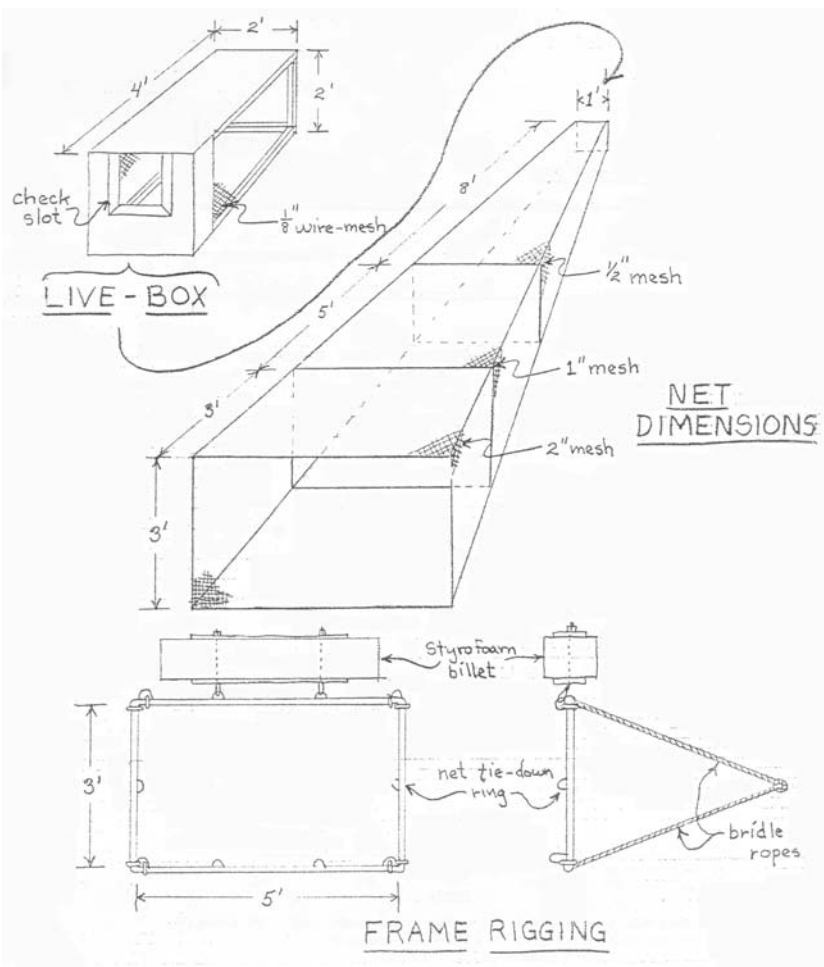

Figure 6. Schematic diagram of a fyke net (Painter et al. 1975).

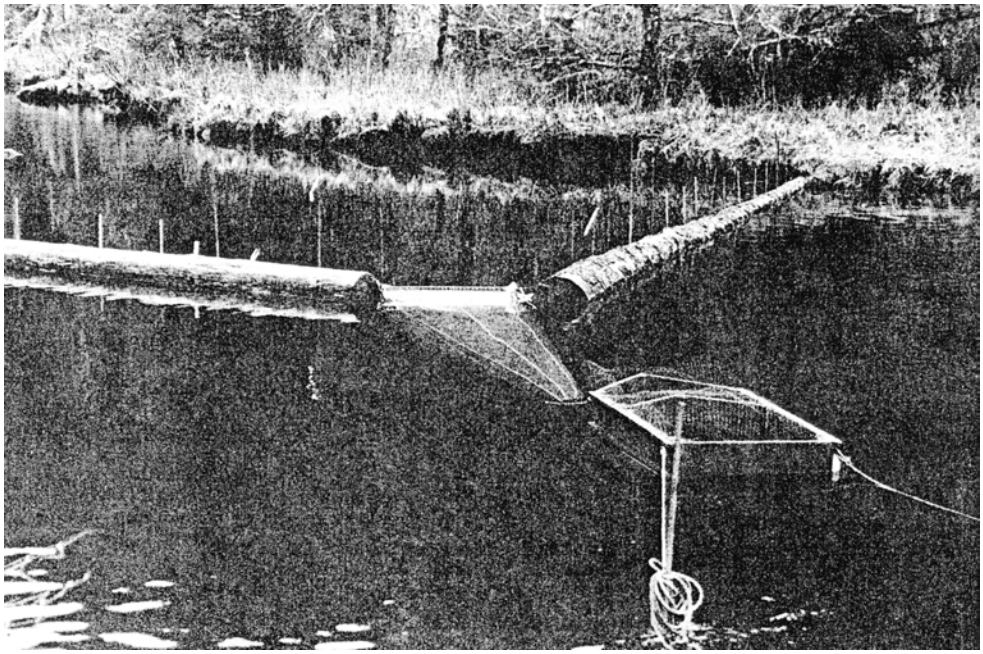

Figure 7. Photograph of fyke net with two fallen logs used to situate the floating device in the center of the streambed (Milner et al. 1985).

Advantages

- Relatively inexpensive, portable, easy to operate, and proven to be effective in capturing fish in flowing waters (Milner et al. 1985)
- May be used in deep water when attached to support cables (Davis et al. 1980)
- Sampling mortality decreases when used with a livebox (Davis et al. 1980)
- Sets of two side-by-side fyke nets and liveboxes worked well in reducing impacts due to high flow (Maahs 1996)

Disadvantages

- At low velocities, fyke nets are "notoriously selective" (DFG 1955)
- Can only be used in shallow water, less than 1 meter deep (DFG 1955)
- Can clog quickly with debris (Davis et al. 1980)
- Does not reliably capture large fish and juveniles have been observed swimming out of fyke traps (pers. com., M. Meinz, DFG, 2002)
- Bows at high flows (Milner et al. 1985)
- Accumulates extensive algae growth, necessitating daily maintenance (Milner et al. 1985)
- Low flows allowed larger smolt (greater than 90 mm) to avoid the net (Milner et al. 1985)
- Outmigrants are able to leave the livebox or avoid it all together (Maahs 1996)
- Livebox makes fry more available to predators than would naturally occur (Maahs 1996)
- Requires "almost constant attention if the captured fish are to be recovered alive" (Davis et al. 1980)
- "Fyke nets requiring shore-to-shore anchoring are unsuitable for use on large navigable rivers" (Davis et al. 1980)
- A minimum flow of 70 cm/sec is recommended to reduce size selectivity (Davis et al. 1980)

- Trapping efficiency can be highly variable or very low (DuBois et al. 1991)

Examples

DFG 1955: The DFG used standard riffle fyke nets with a 3 x 5 ft opening to survey juvenile Chinook salmon at two comparable sites on the Feather River; one near Oroville, the other near Gridley. One operator was needed to check and clean the nets. Each net was held by galvanized wire, which ran from the net either to a metal stake driven into the streambed or to a tree. From mid January through late May of 1955, nets were put in place during the night and inspected each morning. A mark-recapture test to measure trap efficiency was not reported and likely never conducted. As the mark and recapture test was not a standard technique at the time of this study, results are difficult to compare with more recent studies that incorporate expansion measures (DFG 1955).

Painter and Wixom 1975: In the Feather River, DFG used fyke nets consisting of a pipe frame with a 3 x 5 ft opening and livebox. When flow was low, the nets were anchored in riffle areas and floated with Styrofoam logs. During high flow, the nets were cabled to tree limbs. Fyke nets operated from January through March during 1968-1972. One to four nets were fished 24 hours per day, 7 days per week. From April to December, nets fished at least once a week. Each year from 1968 to 1972, mark and recapture studies were conducted to enumerate the number of outmigrant Chinook salmon juveniles. Approximately 1,000 marked fry were released in the Feather River daily from mid-December through mid-March. Fyke nets were used to recapture marked outmigrants and the total number of marked fish released during the outmigration period was compared to the total number of marked outmigrants captured to calculate trap efficiency for the fyke nets. From 1968 to 1972, the average trap efficiency was 0.19%, with efficiencies ranging from 0.0879% in 1969 to 0.46% in 1970 (Painter et al. 1975).

Milner and Smith 1985: Milner and Smith installed two fyke nets in the Black Bear Creek in southeastern Alaska to survey salmon fry and smolts. The team used two fallen logs to situate the floating device in the center of the streambed. The device was designed to rise and fall in the stream with varying flows due to runoff and snowmelt. Wings were made of vexar screen and were attached to the logs in a "V" shape in order to guide fry into the fyke net. The fyke nets operated continuously for 8 weeks, with the live box emptied each morning. At this site, the stream was 15m wide and 1-1.8m deep. A second fyke net was used in shallow water (.5-1.25 m). Pipes were driven into the streambed in the form of a V. Smolts were held overnight for up to 8 hours; however, during peak activity fish were removed on an hourly basis from dusk to dawn. Trap efficiency tests were either not reported or never conducted (Milner et al. 1985).

Leider et al. 1986: During 1981-1984, a survey of pre-smolt steelhead was conducted at two Washington sites. At the Gobar Creek study site, the team used a fyke net with blocking panels spanning the entire creek width (5-8 m). At the second study site, Kalama River, a traversing fyke net was modified from that of Tyler (Tyler 1979) and Davis (Davis et al. 1980). The modified fyke nets used hydraulic winches and positioning cables spanning the river (35 m). Given the 1.8-m frame opening, the Kalama River fyke net was only able to sample a small portion of the total migrants. Sampling was conducted 2-5 nights per week from sunset to sunrise and the net was tended nightly. Trap efficiency, which ranged 0.3%– 8.7% with a mean of 4%,

was estimated based on the recapture of a known number of hatchery steelhead smolts released 19 km above the sampling site (Leider et al. 1986).

Maahs 1996: Coho salmon and steelhead smolts were surveyed in the South Fork Ten Mile River and two of its tributaries, Campbell Creek and Smith Creek, during 1996. The South Fork Ten Mile River ranges 2-70 ft wide and 1 in – 4 ft (average 4 in) deep, with flows ranging from 0.3 – 3.5 cfs (DFG 1961c). Campbell Creek ranges 1-10 ft wide and 2-24 in deep, with flows ranging from 0.01 – 0.3 cfs (DFG 1961a). Smith Creek ranges 1-20 ft wide and 1-4 ft deep, with flows ranging from 0.05 – 0.5 cfs (DFG 1961b). The team used side-by-side fyke nets held in the stream by a metal post in the streambed. Ropes were strung from the fyke nets to the edge of the bank. Wire wing walls connected the net to the banks on either side. Traps were removed when heavy rain was expected or when elevated flows were experienced. Nets were fished once per day by two trap operators from April-July. Trap efficiencies are given below (Maahs 1996).

	Campbell Creek	Smith Creek	South Fork Ten Mile River
Coho	29.0% (n=7)	64.9% (n=37)	21.1% (n=19)
Steelhead	43.3% (n=700)	61.4% (n=879)	25.9% (n=895)

Applicability to the Feather River

Fyke nets exhibit high efficiencies (21% - 65%) in the case studies examined when the fyke net opening spans a relatively large portion of the total river width (Maahs 1996). Even in rivers as small as Black Bear Creek, Alaska, (15 m wide at trap site) wings consisting of Vexar screens were attached in order to guide fry into the fyke net. In larger rivers in which fyke nets were not able to span a relatively large proportion of the total river width, efficiencies were notably lower, with average efficiencies ranging from 0.19% in the Feather River (Painter et al. 1975) to 4% in the Kalama River in Washington (Leider et al. 1986). Fyke net trap efficiencies in the Feather River ranged from 0.0879% in 1969 to 0.46% in 1970 (Painter et al. 1975), which is lower efficiency than what is regularly achieved in the Feather River using RSTs (RST efficiencies range from 0.0% to 6.5% and averaged 1.9% and 3.0% at two trap locations over three years of study). In addition to the disadvantages summarized above, the inefficiency of fyke nets on large river systems as compared to RSTs suggests that fyke nets would not be expected to provide a more accurate, precise, or consistent estimation of the number of emigrating juvenile steelhead in the mainstem Feather River than the currently utilized RSTs.

5.1.5 Inclined-Plane Trapping

Description

An inclined-plane trap consists of an inclined screen that leads to a livebox. Fish are conveyed on to the screen by the current and propelled to the end of the trap where a livebox collects and holds the fish. The screen can be adjusted to fish at varying depths. The trap can be anchored to the bottom of the river/stream or floated by pontoons. The figures below illustrate two inclined-plane traps (**Figure 8** and **Figure 9**).

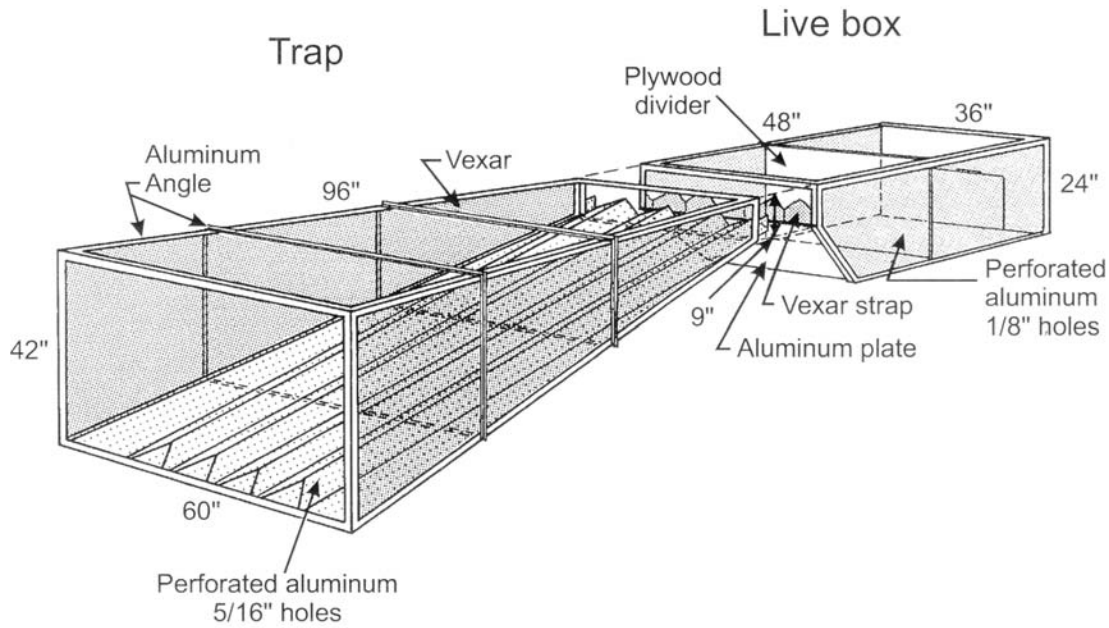

Figure 8. Schematic diagram of an inclined-plane trap (Todd 1994).

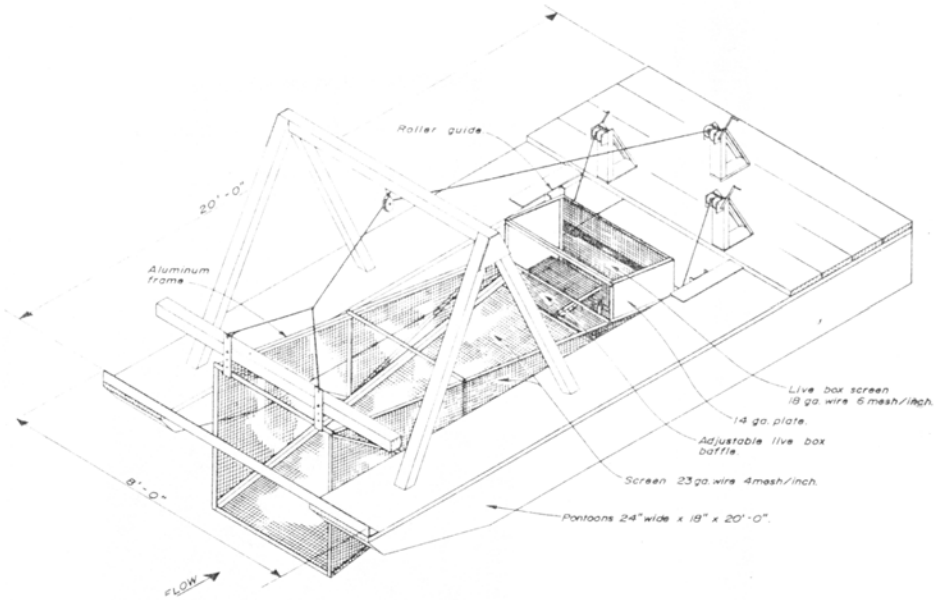

Figure 9. Schematic diagram of an inclined-plane trap (Todd 1966).

Advantages

- Works well for large rivers (McMenemy et al. 1988)
- During survey of Atlantic Salmon smolts, traps retained all smolts captured and were not size selective (McMenemy et al. 1988)
- Works well in medium to large rivers with flows ranging from 5-60 m^3/sec (Todd 1994)

- Mortality in the trap averages less than 5% (Todd 1994)
- Are easy to maintain/repair and have low debris loading (Todd 1994)
- Can be fished at 2 ft depth for 2 hours under any water conditions (Meehan 1964)
- Can withstand large debris and turbid water conditions (Meehan 1964; Todd 1966)

Disadvantages

- Chinook and coho smolts were observed swimming out of the trap (Todd 1994)
- Samples a relatively small proportion of the cross-sectional stream area and can be easily avoided by larger migrants, such as steelhead smolts (Kennen et al. 1994)
- Requires at least 0.7 m/sec to prevent smolts from backing out of the trap (Todd 1994)

Examples

Meehan 1964: The Alaska DFG surveyed salmonid smolts in the Taku River in Alaska. The team modeled their device after the Washington Department of Fisheries' 1960 scoop trap. A pilot study was conducted in 1960 to test the device, and then the sampling program began in 1961. The team fished the trap at a 2 ft depth for 1 hour and 50 minutes, with trap cleaning requiring an additional 10 minutes. Trap efficiency tests were not conducted and or reported (Meehan 1964).

Todd 1966: From 1961 to 1965, the Department of Fisheries of Canada conducted a survey of chum and pink salmon fry in the Fraser River (British Columbia). At the sampling location, the river stretched 1,600 ft wide and 20-25 ft deep. Throughout the sampling period from late February through early June, there were significant variations in river level and velocity. Following the 1961 program, in which both mobile and stationary traps were used, the authors determined that the mobile traps performed more satisfactorily than the stationary units because the mobile traps could: operate regardless of river velocity, obtain higher catches than the stationary gear, avoid potential damage caused by debris, and cost less than their stationary counterparts. As a result, mobile traps were used exclusively beginning in 1962.The mark and recapture test was not a standard technique at the time of this study. Further, the goal of this study was to compare mobile and stationary traps, not to provide a population estimate (Todd 1966).

McMenemy and Kynard 1988: The U.S. Fish and Wildlife Service (USFWS) constructed floating inclined-plane traps working off of previous plans (Conlin et al. 1979) to survey Atlantic salmon smolts in the main stem of the Connecticut River (Massachusetts) during 1985 and 1986. Traps were placed in the center of the river and secured to a railroad bridge. In 1985, one trap fished continuously for 10 weeks and was checked at 3-12 hour intervals. Three traps operated from sunset to sunrise for 6 weeks in 1986. Mark and recapture of hatchery Atlantic salmon smolts resulted in the following estimates of trap efficiencies: 1 of 4,400 (0.023%) in 1985 and 1 of 2,900 (0.034%) in 1986. The authors attributed these relatively low efficiencies, in part, to a small trap entrance relative to river width (McMenemy et al. 1988).

Todd 1994: – The Alaska DFG surveyed sockeye salmon smolts in medium to large (5-60 m^3/sec) Alaskan rivers using inclined-plane traps during various years. Sites included the Kasilof

River, Quartz Creek, and Crescent River. The trap entrance measured 42 inches high and 60 inches across. Two operators were needed for trap monitoring and maintenance. Trap efficiency was tested by mark and recapture (Todd 1994).

Kasilof River: At the trap location, the river was 83 m wide and 1 m deep with discharges ranging from 10 – 62 m^3/sec during May and June. Two liveboxes were bolted together for large catches. In 1991 and 1992, the team used two floating inclined-plane traps. In 1993 and 1994, a single floating inclined-plane trap was used. Catch efficiencies were as follows:

1991	range 8.6 - 15.2%	mean 12.5%	(average release: 699)
1992	range 6.2 - 16.8%	mean 11.9%	(average release: 705)
1993	range 4.2 - 10.7%	mean 7.2%	(average release: 807)
1994	range 6.3 - 10.9%	mean 7.9%	(average release: 902)

Quartz Creek: This creek drains a watershed area of 291 km^2 with normal discharges ranging from 5 – 18 m^3/sec during May and June. During 1982-1984, three stationary inclined-plane traps were anchored on the stream bottom. Catch efficiencies ranged 2.1 - 11.8%, with a mean of 7.1% (average release: 381).

Crescent River: At the trap location, the river was 20 m wide and drained an area of 300 km^2. In 1982, five floating inclined-plane traps, with a staggered placement were fished and yielded a mean catch efficiency of 7.6% (average release: 368).

Applicability to the Feather River

Inclined-plane traps appear to provide relatively high efficiencies for medium- and large- sized rivers, as evidenced by Todd's (Todd 1994) Alaskan studies. These high efficiencies, however, are most likely attributable to the site conditions where the traps were used. For example, with an average depth of 1 m, Kasilof River's entire water column could be sampled by Todd's (Todd 1994) traps, which measured 42 in (1.07 m) in diameter. Additionally, increased efficiency was demonstrated on the Kasilof River when two traps were used, as opposed to one trap. With one trap, average efficiencies of 7.2% and 7.9% were obtained in 1993 and 1994, respectively. During 1991 and 1992, however, combined average efficiencies for the two traps were 12.5% and 11.9%. In contrast, McMenemy and Kynard's (McMenemy et al. 1988) comparatively low efficiencies of 0.023% and 0.034% were attributed, in part, to a small trap entrance relative to river width. As illustrated in the comparison between Todd (Todd 1994) and McMenemy and Kynard (McMenemy et al. 1988), efficiency can clearly be influenced by site conditions, trap placement, and design. In the Feather River, inclined-plane traps may be suitable for enumerating outmigrant juvenile steelhead; however, use of inclined-plane traps would be regarded as largely experimental and would require side-by-side comparisons with RSTs to determine whether it conferred additional benefit with respect to capture efficiency of juvenile steelhead than the currently used RSTs. In addition to the disadvantages summarized above, the variability in trap efficiency associated with inclined-plane traps suggests that inclined-plane traps would not be expected to provide a more accurate, precise, or consistent estimation of the number of emigrating juvenile steelhead in the mainstem Feather River than the currently utilized RSTs.

5.1.6 Inclined-Screen Trapping

Description

An inclined-screen trap is usually angled downwards. The trap can be used in conjunction with a weir or floated with pontoons. Screens filter the water while transporting fish into a holding box. This trap can be modified for use on small to large rivers. The figures below illustrate two inclined-screen traps (**Figure 10** and **Figure 11**).

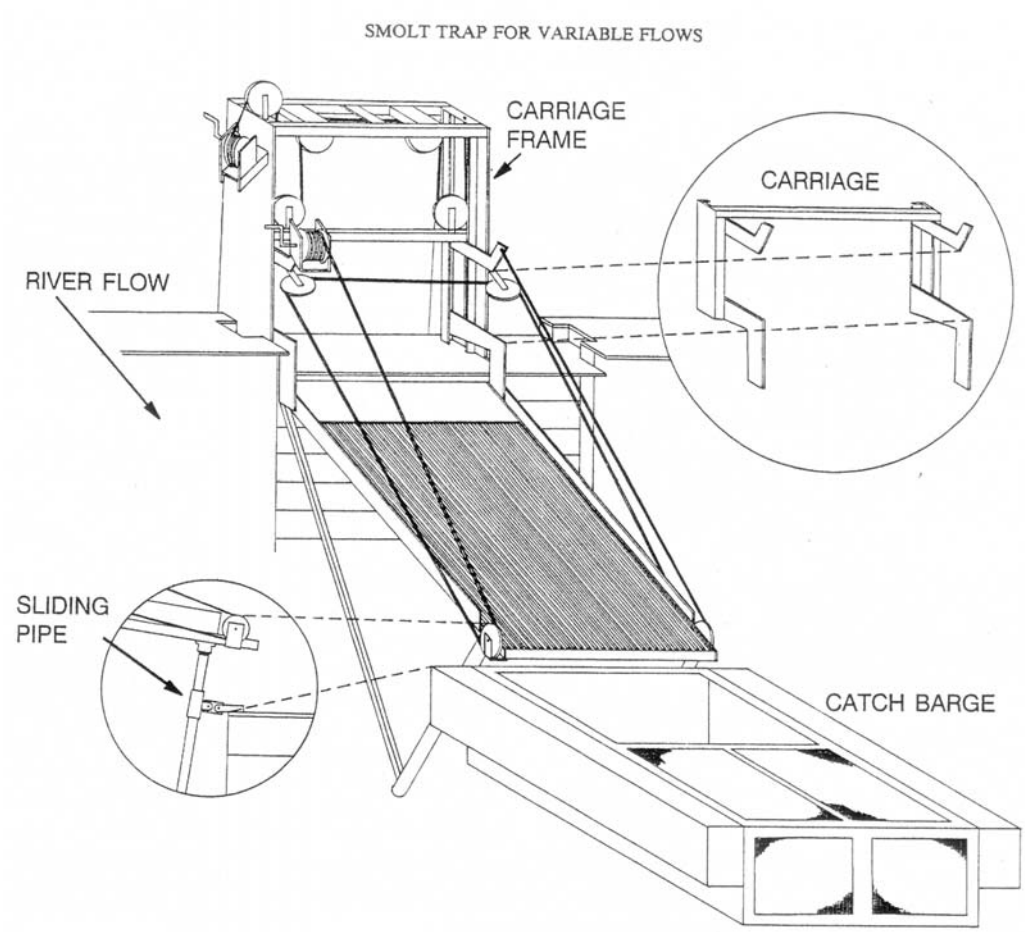

Figure 10. Schematic diagram of an inclined-screen trap (DuBois et al. 1991).

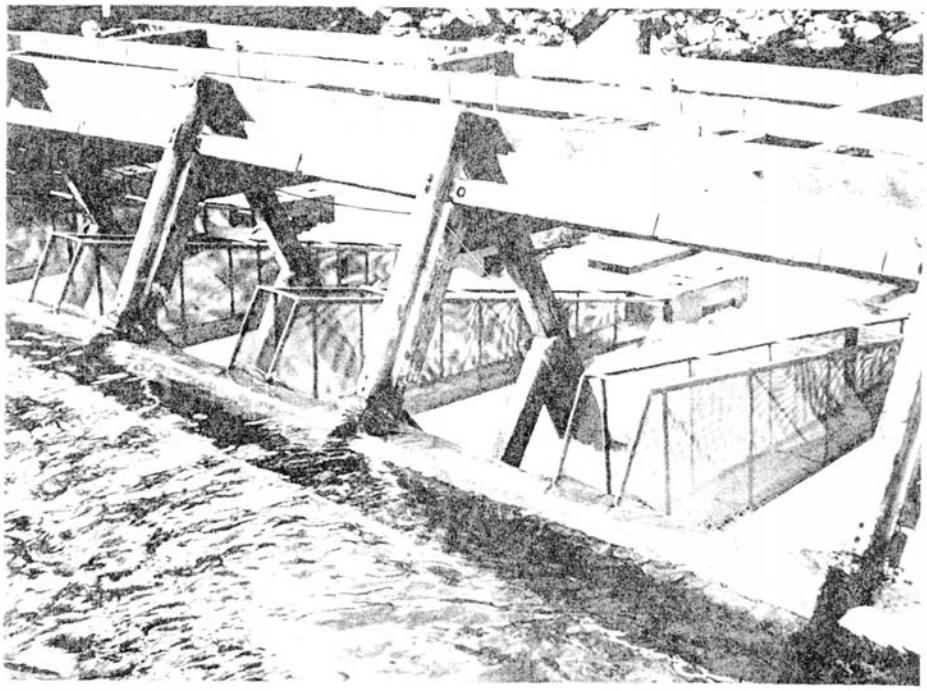

Figure 11. Photograph of inclined-screen traps mounted on low-head dams (Lister et al. 1969).

Advantages

- Provides few opportunities for trap avoidance (DuBois et al. 1991; Seelbach et al. 1985; Wolf 1950)
- Can be used successfully in small to large rivers but only when used with low-head dams (DuBois et al. 1991; Kennen et al. 1994; Lister et al. 1969; Seelbach et al. 1985)
- Trap can be installed in water of any depth, will hold large numbers of smolts, can accommodate moderate changes in flow (± 25%) and debris content, will safely pass downstream-migrating adult salmonids, and is easy to operate (Seelbach et al. 1985)
- Device was resistant to heavy debris buildup, easy to clean, and transported smolts without injury (DuBois et al. 1991)
- Can accommodate fish of any size without injury (Wolf 1950)

Disadvantages

- Can only accommodate moderate ranges of flow fluctuations (DuBois et al. 1991; Lister et al. 1969)
- Functions inadequately during high flows (DuBois et al. 1991)
- Would not operate efficiently at flows greater than 15 cfs (Seelbach et al. 1985)
- Can only be used in locations which provide the necessary head of water (Wolf 1950)

Examples

Wolf 1950: Wolf surveyed Atlantic salmon and sea-run brown trout smolts with a Wolf trap (later named inclined-screen trap) in a Swedish River. Water fell on the screen from a height of

no less than 1 m, conveying the fish into a holding box at the bottom of the screened incline. The author recommended the use of a weir to achieve the conditions necessary for successful trap operation. The trap operated efficiently under varying amounts of flow (up to 35 cfs or more) and was easily maintained. Fish of varying sizes were captured without injury (Wolf 1950).

Lister et al. 1969: Juvenile salmonids in the Big Qualicum River (British Columbia) were surveyed at an enumeration fence. Seven one-foot-wide inclined-screen traps, similar in design to those of Wolf (Wolf 1950), were anchored to the base of the fence at equal intervals across the 60-ft wide river. Trap efficiency was measured by mark and recapture tests. Recapture rates of chum salmon fry averaged 12.5%. Depending on river velocity, however, trap efficiency in capturing coho and steelhead smolts was variable (Lister et al. 1969).

Seelbach et al. 1985: Two inclined-screen traps were operated April-June of 1982 and 1983 to survey coho, Chinook, and steelhead smolts at the Little Manistee River weir in Michigan. The weir had six concrete bays, each measuring 9 ft wide, which intended to pass 1/6 of the total stream flow. During this study, four of the six bays were cordoned off by pipes and chain fences, diverting all of the fish towards the traps, which were stationed under the remaining two bays. At the weir, the average flow was 190 cfs, with spring peaks reaching 450 cfs, while a discharge of 300 cfs was typical during the smolt run. The team designed modifications to the trap described by Wolf (Wolf 1950) that could be used in medium to large-sized rivers (with flows greater than 100 cfs and depths greater than 3 ft), given a low-head dam. Modifications added: hanging inclined-screen, floating catch barge, and fish sorter. Efficiency was first measured by mark and recapture tests using smolts caught in the traps. It was hypothesized that these fish may have a greater probability of avoiding the trap in the future due to their "trap experience," and subsequently additional mark and recapture tests were conducted with smolts caught by electrofishing. The authors noted, however, that experience of trap capture had little effect on subsequent capture rates. Trap efficiencies are provided below (Seelbach et al. 1985).

1982	coho	(n=67)	22.4% +/- 10.2%
1982	Chinook	(n=287)	30.7% +/- 5.4%
1982	steelhead	(n=209)	42.6% +/- 6.8%
1983	steelhead	(n=441)	43.3% +/- 4.7%

Seelbach 1993: Modified inclined-screen traps operated daily during April–June 1982, March-June 1983, and April-June 1984 to survey emigrating steelhead smolts and parr on the Little Manistee River (tributary to Lake Michigan). The LMR is 107 km long, 13 m wide on average, with an average depth of less than 1 m and a mean annual discharge of 5 – 6 m^3/s. Trap efficiencies were estimated by mark and recapture tests of 200-500 smolts per year released 100 m above the traps. Efficiency was 42% in 1982 and 1983, but only 8% in 1984 due to high-water conditions (Seelbach 1993).

DuBois et al. 1991: During June-October 1988 and April–November 1989, steelhead, coho, Chinook, and brown trout smolt and parr were surveyed in the Bois Brule River, a tributary to western Lake Superior. The trap consisted of a pontoon-supported floating barge and an adjustable inclined screen. The team used a partial pipe weir to guide smolts to the trap entrance. The trap remained operational in flows ranging from 2.1-17.3 m^3/s (approximately 75-610 cfs) and through wide fluctuations in debris content without being damaged. With an entrance

measuring 1.5 m, the trap fished approximately 6% of the river width. Efficiency was tested by mark and recapture tests and ranged 2%-17%, with a mean of 5% (DuBois et al. 1991).

Applicability to the Feather River

Inclined-screen traps appear to provide high efficiencies on relatively small rivers. Seelbach's traps yielded efficiencies ranging from 22.4% to 43.3% for coho, Chinook, and steelhead smolts during 1982 and 1983 (Seelbach et al. 1985). Site conditions, however, were most likely a critical component of these high efficiencies. Through the use of pipes and chain fences, which blocked off nearly the entire width of the trapping site, smolts were directed exclusively towards the two traps. Additionally, flows at the weir averaged 300 cfs during trapping operations, which is half of the minimum flow requirement (600 cfs) in the portion of the Feather River upstream of the Thermalito Afterbay Outlet. A low and relatively stable flow appeared to not only influence trapping efficiency, but more importantly, trapping operations in general. Inclined-screen traps also require a low head of water in order to operate efficiently and avoid damage to the device. In larger rivers where the entire flow cannot be directed through the inclined-screen trap, such as the Bois Brule River (DuBois et al. 1991), the trap efficiencies are lower than those reported by Seelbach (Seelbach et al. 1985). DuBois reports efficiencies averaging 5% (DuBois et al. 1991), which is similar to the RST efficiencies reported in the Feather River (averaging 1.9% and 3.0%) (DWR 2002b). Perhaps most importantly, the Feather River does not have a low head dam or small waterfall (dropping not less than 1 m), which is reported as required by the authors of all case studies examined in which inclined-screen traps were utilized. Potential natural drops that would provide appropriate head may include Shanghai Bench, a clay riffle located between RM 26 and RM 25. Although appropriate head may occur at Shanghai Bench, the flow at Shanghai Bench monthly average flows range from 1,000 cfs to 30,000 cfs from February through June, with monthly average flow commonly ranging from 5,000 to 10,000 cfs during these months. Typically, flow at Shanghai Bench is higher than the flows noted by researchers using inclined-screen traps in the summarized case studies, where recommended flow for utilizing this device did not exceed approximately 610 cfs. Although the drop at Shanghai Bench may be provide appropriate head, the high flow is likely to render inclined-screen traps inappropriate for the site conditions at Shanghai Bench. As the Feather River does not boast low and stable flows, a low head dam or similar natural drop that would provide appropriate site conditions, or a site that could be altered so that all fish would be directed towards a trapping device, inclined-screen traps would most likely not operate successfully on the Feather River. In addition to the disadvantages summarized above, the inefficiency of inclined-screen traps on large river systems as compared to RSTs and the lack of appropriate site conditions suggests that inclined-screen traps would not be expected to provide a more accurate, precise, or consistent estimation of the number of emigrating juvenile steelhead in the mainstem Feather River than the currently utilized RSTs.

5.1.7 Trapping (RST)

Description

Rotary screw traps are made up of a rotating cone, usually measuring about eight feet in diameter and submerged halfway, positioned between two pontoons that help to float the entire trap. The trap is operated by lowering the trapping cone into water. Water then hits the baffles, located on

the inside of the trapping cone, which rotates the cone. As fish enter at the upstream end of the rotating trapping cone, they are conveyed into the livebox and held for measuring and enumerating. The figures below illustrate two RSTs (**Figure 12** and **Figure 13**).

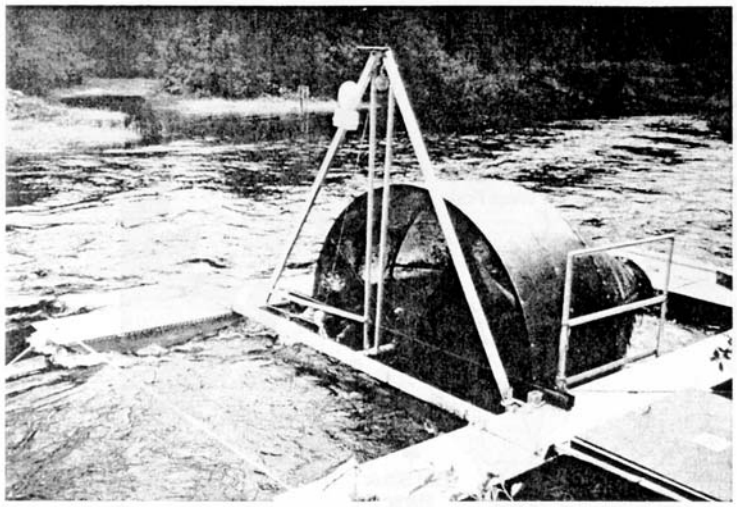

Figure 12. Photograph of a rotary screw trap utilized on the Situk River, Alaska (Thedinga et al. 1994).

Figure 13. Photograph of the Thermalito rotary screw trap in the Feather River (pers. com., J. Kindopp, DWR, 2002).

Advantages

- Rotary screw traps are "sturdy, relatively easy to move within the stream, easy to operate and maintain, are able to capture fish without harm in fast-moving water, and can be used to sample continuously" (DWR 2002b)
- Demko's trap was tested and found not to be size selective (Demko et al. 1998b)

Disadvantages

- Requires adequate water velocities to increase the rotation speed, thereby increasing capture efficiency (Demko et al. 1998b)
- Necessitates trap relocation in response to changes in flow (Snider 1992)
- Problems with debris increase with higher velocities, though efficiency also increases (Snider 1992)
- "RST efficiency appears to be consistently low in large rivers" (Snider et al. 2000a)
- Requires depths greater than 1.2 m and velocity greater than 0.6 m/s (USFWS et al. 2001)
- Requires depths greater than 6 ft, velocity greater than 2 ft/s, sufficient anchoring points, and limited public access (DWR 2002b)

Examples

Lower American River

Snider 1992: In 1992, DFG fished two 8 ft-RSTs on the lower American River near Paradise Beach (RM 5), and later relocated to Watt Avenue, to survey Chinook salmon and steelhead. Flows ranged 700-900 cfs during the length of the study. One trap experienced two counts of vandalism, and later an insufficient velocity for trap operation. Debris buildup was an issue faced by both RSTs. Also, two fyke nets were employed near the RSTs, but they encountered a major debris problem and were moved to the H Street location. Despite problems encountered, at least one RST was fished from late March to early May. Capture efficiency was not estimated due to the many interruptions in sampling (Snider 1992).

Snider and Titus 1995: From November 1993 through April 1994, DFG fished two RSTs near RM 9, downstream of the Watt Ave. bridge. In April, one trap broke down and was removed, while the remaining trap fished through July. Traps were spaced about 300 ft apart. Traps surveyed Chinook, steelhead, Pacific lamprey, and American shad. Flow during the migration period ranged from 800-10,000 cfs. Traps were fished continuously and serviced daily. Three mark and recapture studies were conducted. Two studies were conducted with marked salmon collected in a seine upstream from the traps (tests 1 and 3), while a third study utilized marked fish collected in the RSTs (test 2). All marked fish were released 1 km upstream from the traps. Trap efficiency was 0.84% (n=4,038) and 0.94% (n=1,509) for test 1 and 2, respectively, and 0.0% (n=1,270) for test 3 (no salmon were recaptured) (Snider et al. 1995).

Snider, Titus, and Payne 1997: From November 1994 through September 1995, DFG fished two RSTs near RM 9, downstream of the Watt Ave. bridge. Traps were spaced about 300 ft apart. One trap was removed in March due to a mechanical problem and the second trap was relocated to the same position. Flow during the migration period ranged 1,500-40,000+ cfs. Trap efficiency was not reported (Snider et al. 1997).

Snider, Titus, and Payne 1998: From October 1995 through September 1996, DFG fished one RST near RM 9, downstream of the Watt Ave. bridge. Flow during the emigration period ranged 1,000-20,000+ cfs. Trap efficiency ranged 0.0-2.06%, with an average of 0.68% (Snider et al. 1998b).

Snider and Titus 2000: From October 1996 through September 1997, DFG fished one RST near RM 9, downstream of the Watt Ave. bridge. Trap efficiency ranged 0.0-2.4%, with an average of 0.75% (Snider et al. 2000a).

Snider and Titus 2001: From October 1997 through June 1998, DFG fished two RSTs near RM 9, downstream of the Watt Ave. bridge. In June, one trap was removed, while the remaining trap was fished through September 1998. Flow during the emigration period ranged 2,400-34,000 cfs. Trap efficiency ranged 0.0-3.85%, with a mean of 1.09% (SD =0.97; 80% CI=0.80-1.38) (Snider et al. 2001).

Snider and Titus 2002: From October 1998 through September 1999, DFG fished one 8 ft RST near RM 9, downstream of the Watt Ave. bridge. Additionally, a 5 ft RST was fished from May through September 1999 about 300 ft south of the 8-ft trap. Flow during the emigration period ranged 2,000-24,000 cfs. Trap efficiency was calculated for the period when one RST was used and when both were in use. With one RST, trap efficiency ranged 0.22-2.08%, with a mean of 1.22% (SD =0.74; 80% CI=0.78-1.67). The combined mean weekly trap efficiency of the two RSTs was 1.14% (obtained from two mark and recapture tests involving a total of 444 salmon) (Snider et al. 2002).

Stanislaus River (near Oakdale, CA)

Demko et al. 1993, 1995, 1996, 1998: S. P. Cramer and Associates, Inc. surveyed juvenile Chinook salmon in the Stanislaus River with one RST near Oakdale, CA and two additional traps located near Caswell State Park. The traps measured 8 ft in diameter and were positioned in the main current by a cable suspended across the width of the river. In 1993, the trap operated from April through June from 8pm to 8am, with occasional daytime operations. In 1995, the trap operated from March through June. From January-June of 1996 and 1998, the trap was fished 24 hours a day, seven days a week. During June and July, the trap operated Monday through Friday to avoid weekend river users. The RST was checked and cleaned daily. The traps were tested and found not to be size selective. Mark and recapture tests resulted in the following recapture rates:

- 1993 Average 23% (only two mark-recapture estimates made with the following number of fish released; n_1=69 and n_2=13) (Demko et al. 1993)

- 1995 Efficiency widely variable in two tests conducted, using natural migrants (efficiency range 0-48%) and hatchery fish (efficiency range 5.3-29.2%) (Demko et al. 1995)

- 1996 Varied from 1.3% (n=617) at high flows and 28.38% (n=969) at low flows (released six groups of marked natural migrants and four groups of marked hatchery Chinook between mid February and late May) (Demko et al. 1996)

- 1998 Range 2.7% (n=929) to 8.6% (n=267) (between early March and late June, released nine groups of marked natural migrants and two groups of marked hatchery Chinook) (Demko et al. 1998b)

Butte Creek

Hill and Webber 1999: From 1995-1998, DFG surveyed spring-run juvenile Chinook salmon at three locations in Butte Creek (Central Valley, CA) with 8-ft-RSTs. Trap placement was regularly modified based on flow, which was highly variable at each site. All traps operated 24 hours a day, seven days a week. Efficiency estimates were as follows (Hill et al. 1999):

1995/1996	0.4%	(n=14,452)
1996/1997	0%	(n=449)
1997/1998	0.15%	(n=3,408)

Upper Sacramento River (at Red Bluff Diversion Dam)

USFWS 2001: The USFWS (USFWS) surveyed juvenile winter Chinook on the Upper Sacramento River at the Red Bluff Diversion Dam from 1995-1999. USFWS attached 4 RSTs, each measuring 8 ft in diameter, directly behind the dam to sample fish from the east and west river margins as well as the mid-channel habitats. The RSTs required depths greater than 1.2 m and velocity greater than 0.6 m/s. During the 54 mark and recapture tests, trap efficiency for all traps combined ranged 0.37%-5.27%, while river discharge ranged from 5,950 cfs to 36,508 cfs. The authors noted that the highest relative frequencies of recaptured fish were observed in the mid-channel traps (USFWS et al. 2001).

Feather River (at Thermalito Afterbay Outlet and Live Oak Recreation Area)

DWR 2002: The DWR (DWR) surveyed Chinook salmon and steelhead in the Feather River from November to June during 1998-2001. Two 8 ft-RSTs were fished about 20 miles apart. The first trap was placed 1 mile above the Thermalito Afterbay Outlet, while the second trap was located 1/3 mile upstream of the Live Oak Recreation Area boat ramp. Both traps fished continuously and were serviced daily. DWR developed criteria for RST use including the following: depths greater than 6 ft, velocity greater than 2 ft/s, sufficient anchoring points, and limited public access. Fish caught by the RSTs were used for mark and recapture tests. For the Thermalito trap, recapture rates (over the 3 year period) ranged 1.0%-4.6% with an average of 3.0% (SD = 1.25). For the Live Oak trap, the range was 0.0%-6.5%, with a 1.9% average (SD = 1.77) (DWR 2002b).

Applicability to the Feather River

The RST is physically applicable to the Feather River and has been used there historically, providing a record of use and comparable efficiencies. In general, trap efficiencies are relatively low in large rivers such as the Feather River; however, Feather River RST efficiencies are similar to and in some cases better than device efficiencies of alternative devices which could be used in place of RSTs. A description of how other devices compare to RSTs for the purpose of enumerating juvenile steelhead in the Feather River is provided under each alternative device in "Applicability of device to the Feather River". Additionally, a more detailed discussion of RST efficiencies and a comparison of Feather River RST efficiencies with RST efficiencies on other similar rivers can be found in "RST Efficiency Comparison".

5.1.8 Seining

Description

Seines trap fish by encircling them in a fencelike wall of netting. Seines have a float line suspended on the surface and a lead line, which is attached to weights so that it sinks and forms the desired wall of webbing. Many seines also have a specially constructed bag in which the fish are concentrated as the net is hauled. Variations of the seine include: beach seines, haul seines, and purse seines. Beach or haul seines are typically used in shallow water where the net wall extends from the surface to the bottom and are most effective for nearshore residents. Beach seines can be hauled by either one or two vessels or people. Purse seines are generally used to collect pelagic species swimming near the surface in open water. Purse seining involves setting a long net to enclose the school of fish being targeted and can be operated by either one or two boats. The figure below illustrates several types of seines (**Figure 14**).

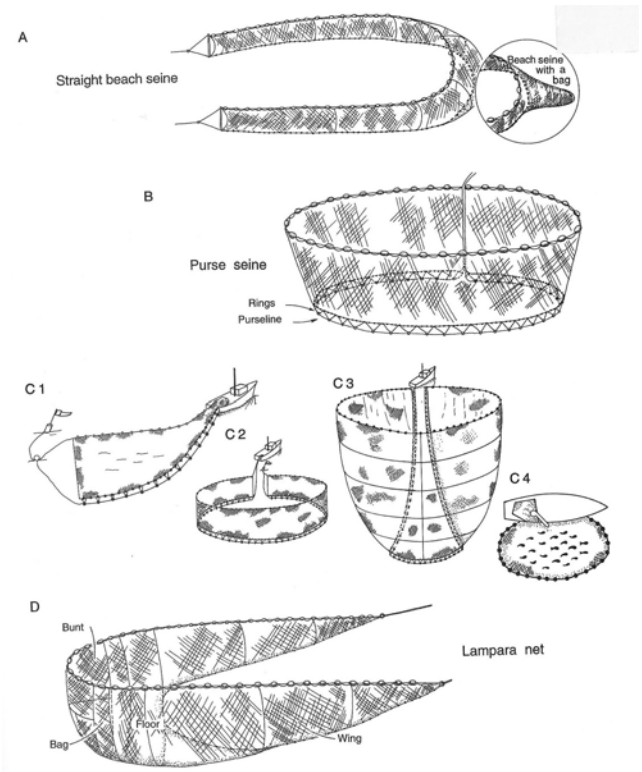

Figure 14. Diagram depicting several seines including: (A) straight beach seine; (B) purse seine; (C) the setting of a purse seine in a one-boat systems; and (D) a lampara net (Hayes et al. 1996).

Advantages

- Relatively easy to deploy, the sampling is rapid, a large area can be sampled, the limits of the sampling area are precisely defined, and fish are obtained live with minimal trauma (Hayes et al. 1996)
- Provides for live release of fish (Pierce et al. 1990)
- In contrast to trawls and most dredges, beach seines can be fished without a vessel and can be operated by a single person (Hayes et al. 1996)

Disadvantages

- Beach seine capture efficiency has been found to vary with the position of each species within the water column and also varies with fish behavior (Hayes et al. 1996)
- Capture efficiency is related to the bottom structure of the area being sampled (i.e., structures that cause the seine to snag or roll will reduce efficiency) (Hayes et al. 1996)
- Applicability is limited to shallow water with a fairly uniform bottom and low water velocities. Consequently, sampling overlooks fish in deep-watered, rough-bottomed or swift habitats and misses fish that avoid the nets (DWR 2002a)
- To prevent fish from escaping under the net, the lead line must be in contact with the bottom and not become entangled or caught on obstructions along the bottom (Hayes et al. 1996)

Examples

DWR 2002: DWR conducted seining surveys in the Lower Feather River between January 1997 and August 2001 to document fish distribution and abundance. The study area included the reach of the Feather River extending from the Fish Barrier Dam to the Thermalito Afterbay Outlet and the reach of the Feather River extending from the Thermalito Afterbay Outlet to Boyd's pump. Two methods of seining were used for the study: box seining was used for boat ramps and beach seining was used for open and moving water habitats, such as riffles and glides. In both methods, all fish were removed from the seine and put into a five-gallon bucket of water for species identification and enumeration. Chinook salmon and Sacramento sucker were most common, making up over 85 percent of the catch. No other species exceeded ten percent of the total. Most steelhead rainbow trout were in the reach of the Feather River extending from the Fish Barrier Dam to the Thermalito Afterbay Outlet and non-natives were most prevalent in the reach of the Feather River extending from the Thermalito Afterbay Outlet to Boyd's pump, while natives resided throughout the study area. Of the 35 species observed in the Feather River by Painter (Painter et al. 1977), seines collected 26 species over the five years of the study (DWR 2002a).

Parsley et al. 1989: The objective of this study was to determine the capture efficiency of a beach seine in order to improve abundance estimates of small fishes in littoral areas. Capture efficiency for 14 individual species (taxa) was found by seining within an enclosure at night over fine and coarse substrates in the John-Day Reservoir in Oregon-Washington. Seining was conducted from April through August in 1985 and 1986 and consisted of 17 collections made over fine substrates (composed of sand) and 15 over coarse substrates (composed of cobble with gravel and sand). Mean capture efficiency estimates ranged from 12 percent (N=15) for prickly sculpin captured over coarse substrates to 96 percent (N=12) for peamouth over fine substrates. Mean catch efficiency for Chinook salmon, age young-of-year and older, was 84 percent (N=9) over fine substrate and 55 percent (N=11) over coarse substrate. The difference in capture efficiency was probably due to variation in nocturnal behavior of individual species, including distribution in the water column, foraging resting behavior, and fright response (Parsley M.J. et al. 1989).

Applicability to the Feather River

Seining is currently conducted in the Feather River primarily to obtain distribution data and relative abundance of various fish species. It has not been used to obtain quantitative estimates of individual species. As discussed above, seining is limited to shallow water with a fairly uniform bottom and low water velocities, so that the webbing does not tangle and snag. Although there are several feasible seining sites along the Feather River, seining would not be feasible in areas with woody debris, which may snag nets and release fish. Seines may capture both rearing and emigrating steelhead, while other devices such as RSTs are designed to capture emigrating juvenile steelhead. Additionally, seining is typically used in a closed system for quantitative estimates, such as in (Parsley M.J. et al. 1989). It is difficult to obtain accurate quantitative enumeration estimates via seining in an open system, such as a river, because fish move in and out of the system. Perhaps most importantly, seining does not allow for continuous sampling because the seine must be hauled through the water each time a sample is collected. In contrast, other devices, such as RSTs, trap fish continuously. In addition to the disadvantages summarized above, the inability of seines to sample continuously and the difficulty associated with abundance estimates in open systems using seines suggests that seining would not be expected to provide a more accurate, precise, or consistent estimation of the number of emigrating juvenile steelhead in the mainstem Feather River than the currently utilized RSTs.

5.1.9 Snorkeling

Description

Snorkel surveys involve one or more snorkelers swimming in a water body while taking estimates or counts of fish. The snorkelers are often followed by a recorder who rafts behind them and keeps track of their data. The figure below depicts divers conducting a snorkel survey (**Figure 15**).

Advantages

- Provides details regarding microhabitat distribution (pers. com., B. Cavallo, DWR, 2002; Jones et al. 1995)
- Allows observation of fish interactions (Dolloff et al. 1996)
- Requires minimal equipment (Dolloff et al. 1996)
- Can be used in remote locations (Dolloff et al. 1996)
- Small streams and rivers are normally well-suited for snorkel observations, given adequate underwater visibility (Dolloff et al. 1996)

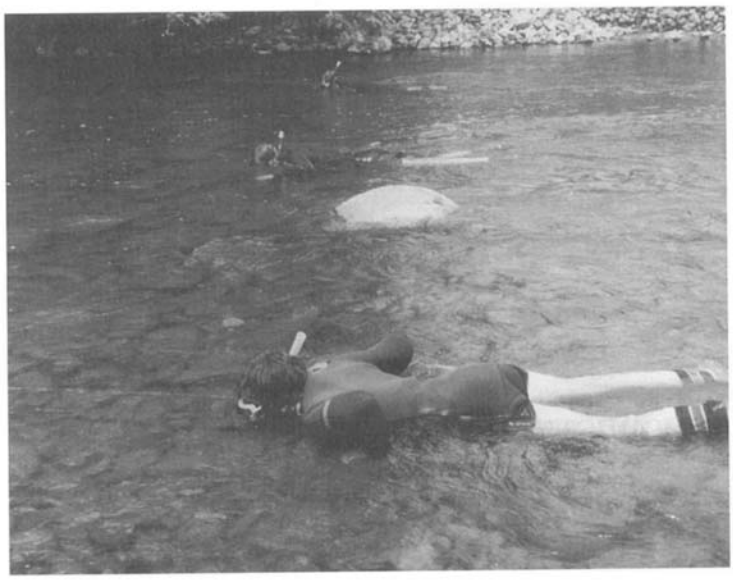

Figure 15. Photograph of divers conducting a snorkel survey (Dolloff et al. 1996).

Disadvantages

- Increased turbidity may cause difficulty in obtaining observations (Dolloff et al. 1996)
- Increased flows can cause safety hazards (Dolloff et al. 1996)
- Does not allow measurements of weight or length (Dolloff et al. 1996)
- May result in incorrect identification of organisms (Dolloff et al. 1996)
- Does not allow for continuous sampling
- Multiple divers, generally required on larger rivers, may introduce diver bias or increase the chance that organisms are counted more than once (Dolloff et al. 1996)
- Because fish are not captured, mark-recapture studies cannot be performed

Examples

Shardlow et al. 1987: Shardlow et al. surveyed Pacific salmon in the Big Qualicum River on Vancouver Island, Canada. The team compared fish counts obtained from walking, rafting, and swimming. For swimming surveys, two snorkelers swam side-by-side, followed by two recorders in a raft. In large portions of the river, the two counts were added together, while in more narrow areas, an average count was taken. Results showed that the probability of seeing a Chinook salmon increased from walking, to rafting, to swimming. This was because the newly arrived Chinook and coho hid in the shaded pools, making themselves almost invisible to the walking observers while more and more visible to the rafting and swimming observers. In riffle habitat, however, swimmers encountered observational difficulty. Though swimmers on average observed more fish than walkers and rafters, swimming proved overall to be the least reliable method because of the time, difficulty, and hazard associated with swimming observations. Also, the authors found that a raft or a walk count appeared to provide as good of an index of fish density as a swim (Shardlow et al. 1987).

DWR 1999-2001: The DWR surveyed the Feather River during May 1999, June 2000, and May 2001. Number of fish, size (total length), and habitat (i.e., substrate, cover, and hydrogeomorphic unit) were recorded. Water temperature and weather conditions were also measured and recorded during the study. Snorkeling observations were made in a downstream direction, with three to six snorkelers divided among three transects (i.e., left bank, right bank, and center channel). Sampling was conducted on the following three physical scales: broad, intermediate, and fine. The broad-scale snorkel survey was conducted once annually, in early summer, and provided a snapshot of the overall distribution of fish in the Feather River downstream of the Fish Barrier Dam (i.e., number of fish observed by river mile). This survey was conducted from the Fish Barrier Dam to Gridley Bridge and took approximately two weeks to complete. The intermediate scale survey occurred once a month from March through August at nine permanent snorkeling sites. Six of the snorkeling sites are located between the Fish Barrier Dam and the Thermalito Afterbay Outlet, while the remaining three sites are located between the Thermalito Afterbay Outlet and the confluence with Honcut Creek. Intermediate scale snorkel surveys provided information regarding both the temporal and geographic distribution of a variety of fish species in the Feather River (i.e., number of fish per snorkel unit, percent frequency use of hydrogeomorphic unit, and percent frequency use of cover). Fine-scale snorkel surveys began in 2001 and occurred monthly from March through August. These surveys collect information regarding fish distribution and habitat data within small units (25 by 4-meter transects) (DWR 2002c). All three scales of snorkel surveys will continue to be conducted for the purpose of Oroville Facilities Relicensing as described SP-F10, Task 3A.

Applicability to the Feather River

Snorkel surveys are applicable to the physical site conditions of Feather River because the number of snorkelers used can be adjusted, depending upon river size, in order to ensure adequate coverage of the river. However, snorkeling is not effective when conditions are turbid or flows are too high to be considered safe. Snorkeling does not provide as accurate a counting mechanism as other devices, such as RSTs, because of individual bias. Additionally, because fish are not captured, mark-recapture tests is not generally conducted in order to calibrate observational data. For these reasons, snorkel surveys, that have previously been conducted on the Feather River have focused on obtaining data regarding fish distribution as opposed to focusing on estimating fish population size. Additionally, a snorkel survey would not facilitate obtaining fish metrics such as fish length and sex. In addition to the disadvantages summarized above, the inability to sample continuously, and the difficulty associated with generating abundance estimates via snorkel surveys suggests that snorkeling would not be expected to provide a more accurate, precise, or consistent estimation of the number of emigrating juvenile steelhead in the mainstem Feather River than the currently utilized RSTs.

5.1.10 Trawling

Description

A trawl is a large, funnel-shaped net usually attached to the back of a boat and dragged at the bottom of a streambed (bottom trawl) or in the water column (mid-water trawl). Fish are

collected in the cod end of the net as it is dragged through the water. The figures below illustrates several types of trawls (**Figure 16** and **Figure 17**).

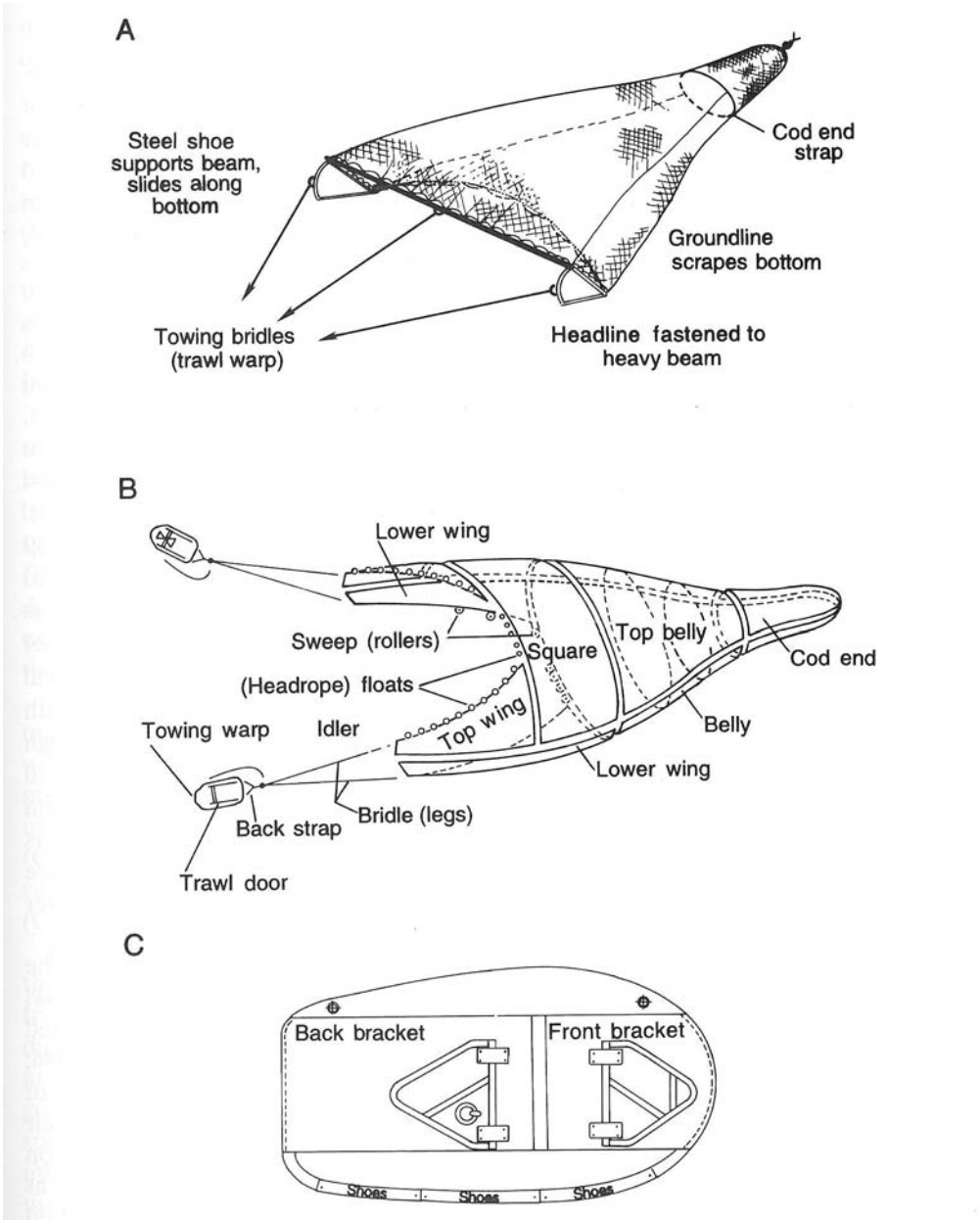

Figure 16. Diagram of several types of bottom trawls: (A) beam trawl; (B) otter trawl; and (C) otter door (Hayes et al. 1996).

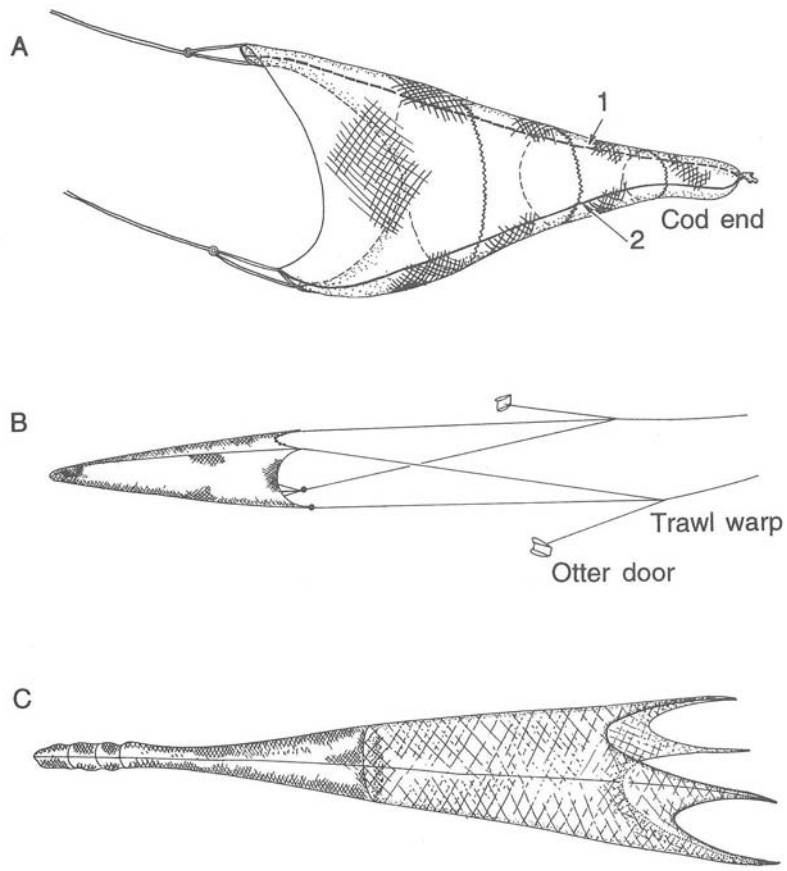

Figure 17. Diagram of several types of midwater trawls: (A) two-seam trawl; (B) four-seam trawl with pelagic otter doors; and (C) four-seam midwater trawl with large mesh webbing near trawl mouth (Hayes et al. 1996).

Advantages

- "The stability of the survey design, the consistency of the statistical analysis and the general experience of both fishermen and biologists have shown that the surveys often provide useful indices of fish abundance" (Beamish et al. 2000)
- Sample a discrete area or volume over a specified time (Hayes et al. 1996)
- Easy to obtain physical measurements such as length and weight (Hayes et al. 1996)
- Live fish for mark-recapture studies can be obtained (Hayes et al. 1996)

Disadvantages

- "Capacity of gear to sample fish is difficult to quantify" (Beamish et al. 2000)
- Has been "found to injure fish and increase mortality" (Czajkowski et al. 1996)
- Trawl placement in vertical column influences what species of fish will be caught (DWR 2000)
- Does not sample entire width and depth of water body
- Requires significant personnel hours (Hayes et al. 1996)
- Is only suitable for areas free of snags and debris (Hayes et al. 1996)

- Does not sample continuously
- Requires a relatively powerful vessel to pull the trawl (Hayes et al. 1996)
- Most commonly used in oceanic and estuarine habitats (Hayes et al. 1996)

Examples

Czajkowski et al. 1996: Czajkowski et al. surveyed walleyes in the Lake Winnebago system in Wisconsin by comparing fish returned by anglers. From 1986 to 1988, the Wisconsin Department of Natural Resources tagged walleyes caught by traps, fyke nets, electroshocking, and trawls. The subsequent recapture of these tagged walleyes show fish caught with trawls have higher mortality than fish caught by the other methods. Results show that of those walleyes caught using trawls, fewer were recaptured, which indicates a lower survival rate for trawl-caught fish. The authors concede that size may also be a factor in that walleyes are generally smaller than other species and may therefore be more vulnerable to stress and injury during capture efforts (Czajkowski et al. 1996).

DWR 2000: The DWR determined that midwater trawling was not a reliable sampling technique for the Lake Oroville Fishery Study of Wakasagi smelt and threadfin shad. The 20 m trawl could not cover even half of the Lake's depth. Additionally, Lake Oroville water has a high degree of clarity, making it easy for fish to avoid the trawl (DWR 2000).

Beamish et al. 2000: Beamish et al. surveyed juvenile coho salmon in the Strait of Georgia in British Columbia. The team used a model "250\350\14 mid-water rope trawl" to fish 0-45 m deep (Beamish et al. 2000). They conducted surveys in September of 1996, 1997, and 1998 covering a total of 5,899 km^2, which represented approximately 93% of the Strait of Georgia (Beamish et al. 2000). Trap efficiency tests were not conducted (Beamish et al. 2000).

Applicability to the Feather River

Trawls are typically used in large ecosystems such as a large lakes or estuaries because of the large area that can be covered, and are typically not utilized in rivers. Because trawls necessitate substantial personnel hours and do not sample continuously, trawls would not be as suitable for use on the Feather River as devices such as RSTs, which sample continuously and require comparably fewer person hours. In addition to the disadvantages summarized above, the inability to sample continuously and the general practice of using trawls in large lakes and estuaries suggests that trawls would not be expected to provide a more accurate, precise, or consistent estimation of the number of emigrating juvenile steelhead in the mainstem Feather River than the currently utilized RSTs.

5.1.11 Conclusions

Of the devices examined which could be utilized to enumerate outmigrating juvenile steelhead in the Feather River including acoustic devices, camera monitoring, electric fish counters, fyke nets, inclined-plane traps, inclined-screen traps, rotary screw traps, seining, snorkel surveys, and trawls, RSTs were determined to be the most appropriate for the purpose of enumerating outmigrating juvenile steelhead in the Feather River. Although there are several reasons that

each alternative device were suggested to be inappropriate, there are several common reasons that alternative devices may have been suggested as inappropriate. Several devices require specific site conditions which are not present in the Feather River. For example, camera monitoring and electric fish counters are not suitable for use in the mainstem Feather River because there is no point of constriction narrow enough to use them effectively. Additionally, inclined-screen traps require a low head dam for operation or similar natural drop with relatively low velocities, which is not present in the Feather River. Some devices do not allow differentiation of juvenile emigrating steelhead from other juvenile emigrants, such as Chinook salmon. Devices with this limitation include electric fish counters and acoustic devices. Several devices and methods, including seines, trawls, and snorkel surveys, do not sample continuously and as a result would not as suitable as devices such as RSTs, which do sample continuously. Finally, fyke nets and inclined-plan traps exhibit efficiencies in comparable large rivers that are as low as, and in some cases lower than, RST efficiencies. As a result, no device or method examined would be expected to provide a more accurate, precise, or consistent estimation of the number of emigrating juvenile steelhead in the mainstem Feather River than the currently utilized RSTs.

5.2 RST Efficiency Comparisons

Because RSTs appear to offer the most effective means of enumerating juvenile salmonids in the Feather River, comparisons to other similar river application of RST devices were examined to determine if the current Feather River RST's performance is likely to have any opportunity for improvement. Overall, findings indicated that the current Feather River efficiencies are comparable to those obtained with other devices under relatively similar conditions in comparably large rivers.

Table 1 provides a summary comparison of several studies that utilized rotary screw traps on five rivers similar in size to the Feather River. The table compares studies on the Feather River, upper Sacramento River, lower American River, Stanislaus River, and Situk River (Alaska). Often, studies were conducted at multiple sites in each river. Table 1 lists these sites along with their approximate location on the river, expressed in river miles (RM). Next, site characteristics such as river width and flow are given. This information is important as the proportion of flow entering the enumeration device affects the device's efficiency in addition to providing observable means of comparing various sites. A brief trap description follows the site characteristics. Variations in trap description consist of trap size (diameter), placement (side-by-side or spaced apart), number (single trap vs. multiple traps), and additional devices (sandbag wall or fences). Following the trap description, efficiency ranges and averages are provided for each year the study was conducted and data collected. Efficiencies are important because they indicate the percentage of fish caught by the enumeration device. Where available, confidence intervals are included to assist in the interpretation of the efficiency data. Finally, sources are given for each study for further reference.

Table 1. Comparison of rotary screw traps on several similar river systems.

River	Site	Width/Flow	Trap Description	Trap Efficiency	Confidence Intervals	Source
Feather River	Thermalito (RM 60.1)	58 m wide 2.5 m deep 600-650 cfs (During emigration)	8 ft RST (one at each site)	Range 1.0-4.6% Avg. 3.0%	Not available	(DWR 2002b; pers. com., J. Kindopp, DWR, 2002)
	Live Oak Recreation Area (RM 42)	52 m wide 2 m deep 750-40,000+ cfs (During emigration)		Range 0.0-6.5% Avg. 1.9%	Not available	
Upper Sacramento River	Red Bluff Diversion Dam (RM 243)	750-760 ft wide 5,950-36,508 cfs (During trials 95-99)	4 RSTs in tandem attached to dam	Range 0.37-5.27%	Not available	(USFWS et al. 2001)
	Knights Landing (RM 89.5)	20 ft deep Velocity 3.0 ft/s 6,000-29,000 cfs (Nov. 95-July 96) 4,520-29,470 cfs (Sept. 96-Oct. 97) 3,718-30,260 cfs (Sept. 97-Oct. 98)	Two 8 ft RSTs ganged	1996 Range 0.015-4.6% (Avg. 1.04%) 1997 Range 0.0-5.4% (Avg. 1.45%) 1998 Range 0.0-4.08% (Avg. 0.80%)	1996 Not available 1997 SD 1.19%; 80% CI 1.06-1.83%; n=17 1998 SD 0.96%; 80% CI 0.53-1.07%; n=22	(Snider et al. 1998a; Snider et al. 2000b; Snider et al. 2000c)
Lower American River	Immediately downstream of Watt Ave. bridge (near RM 9)	Approx. 500 ft wide 800-10,000 cfs (Nov. 93-July 94) 1,500-40,000 cfs (Nov. 94-Sept. 95) 3,000-60,000 cfs (Nov. 95-July 96) 2,000-115,000 cfs (Dec. 96-Sept. 97) 2,400-34,000 cfs (Oct. 97-Sept. 98) 2,000-24,000 cfs (Oct. 98-Sept. 99)	93/94 Two 8 ft RSTs about 300 ft apart (one removed in April) 94/95 Two 8 ft RSTs about 300 ft apart (one removed in March) 95/96 One 8 ft RST 96/97 One 8 ft RST 97/98 Two 8 ft RSTs about 300 ft apart (one removed in June) 98/99 One 8 ft RST (Oct.-Sept.) and one 5 ft RST (May-Sept.)	93/94 0.0%, 0.84%, 0.94% 94/95 Not available 95/96 Range 0.0-2.06% (Avg. 0.68%) 96/97 Range 0.0-2.4% (Avg. 0.75%) 97/98 Range 0.0-3.85% (Avg. 1.09%) 98/99 One RST=Range 0.22-2.08%, Avg. 1.22%. Two RSTs=Avg. 1.14%	97/98 SD =0.97; 80% CI=0.80-1.38 98/99 With one RST: SD =0.74; 80% CI=0.78-1.67	(Snider et al. 1995; Snider et al. 1997; Snider et al. 1998b; Snider et al. 2000a; Snider et al. 2001; Snider et al. 2002)
Stanislaus River	Near Oakdale Recreation Area, 3 miles west of the town of Oakdale (RM 40.1)	243-1,620 cfs (April-June 1993) 208-1,588 cfs (March-June 1995) 300-3,975 cfs (Feb.-June 1996) 1,000-5,500 cfs (Jan.-July 1998)	One 8 ft RST	1993 Avg. 23% (only 2 surveys; n_1=69 and n_2=13) 1995 Natural migrants range 0-48%, hatchery fish range 5.3-29.2% (highest efficiencies at 200+cfs) 1996 Avg. 1.3-28.38% 1998 Range 2.7-8.6%	Not available	(Demko et al. 1993; Demko et al. 1995; Demko et al. 1996; Demko et al. 1998b)

River	Site	Width/Flow	Trap Description	Trap Efficiency	Confidence Intervals	Source
	Caswell State Park (RM 8.6)	400-4,000 cfs (Feb.-June 1996) 500-1,750 cfs (March-June 1997) 800-4,000 cfs (January-June 1999)	Two 8 ft RSTs ganged with sandbag wall 10 ft upstream of traps	1996 Range 0-12.08% 1997 Range 1.6-3.6% 1999 Range 1.57-3.76%	Not available	(Demko et al. 1997; Demko et al. 1998a; Demko et al. 2000)
Situk River, Alaska	Near Yakutat, Alaska (20 km from river mouth)	16 m wide, 1.2-2.4 m deep, Velocity 70-170 cm/s	Two RSTs (2.4 m diameter each), 17 km apart, attached to 5- m-long fences in a V shape	Average for smolts: Steelhead 3% Sockeye 7% Coho 12% Chinook 24% Range: Chinook smolts 5-40% Steelhead smolts and parr 1-15%	Not available	(Thedinga et al. 1994)
	Near Yakutat, Alaska (3 km from river mouth)	24 m wide, 1.2-2.4 m deep, Velocity 70-170 cm/s			Not available	

As illustrated in Table 1, trap efficiencies are generally low and vary depending on site conditions (i.e., flow). RST efficiencies on other rivers are comparable to Feather River RST efficiencies. Additionally, RST efficiencies for single traps on the Feather River are higher than those in other river despite the use of multiple traps (i.e., two traps ganged together). In fact, Feather River mean efficiencies of 3% and 1.9% are higher than those found at Knights Landing on the upper Sacramento River, at which two RSTs were ganged and produced mean efficiencies ranging from 0.80% – 1.04%. Additionally, efficiencies of RSTs operated on the Lower American River were also lower than those on the Feather River, ranging from 0.0 - 3.85%. RST efficiencies are clearly comparable to efficiencies exhibited by RSTs in other large Central Valley Rivers.

There are several cases where the reported RST efficiencies are considerably higher than those reported for large, Central Valley rivers, such as the Feather River. The higher efficiencies recorded on the Stanislaus River may result from the methodologies employed to determine trap efficiency. On the Stanislaus River at Oakdale, the 1993 mean efficiency was 23%. The team, however, only conducted two mark and recapture surveys with sample sizes of 69 and 13 released fish. Of the 69 released fish, only 15 were recaptured, while of the 13 released fish, only four were recaptured. Release of so few fish for mark-recapture studies may result in highly variable efficiency estimates. On the Stanislaus River, efficiencies reached as high as 48% in 1995; however, the mark-recapture experiment yielding the highest efficiency was conducted during periods of very low flows (around 200 cfs), which has the potential to alter the trap efficiency substantially. Additionally, RST efficiencies reported on the Situk River in Alaska were generally higher than those reported in the Feather River. However, the Situk River is approximately half as wide as the Feather River in one of the two trapping locations, and approximately one-fourth the width of the Feather River in the second trapping location. In addition to the differences in river width, 5 meter long "V"-shaped fences were utilized as wings to guide fish into the RST in the Situk River, reportedly resulting in improved efficiencies when compared to efficiencies of the RST without the wings (pers. com., J. F. Thedinga, NMFS, 2002). Therefore, site conditions and use of "V"-shaped fences may result in the higher RST efficiencies in the Situk River.

In summary, RST efficiencies in other comparably large rivers were similar to those reported in the Feather River and in many cases RST efficiencies in the Feather River exceeded the efficiency documented in other rivers, even those rivers utilizing multiple traps. Reports of substantially higher RST efficiencies may result from small sample size of released fish for mark-recapture studies, unusual flow conditions, or the use of wings to guide fish into the RST.

5.3 POTENTIAL RST DEVICE MODIFICATION

This section focuses on modifications to RSTs and includes both physical modification to RSTs such as diversion wings, ganged RSTs, multiple RSTs, which may provide opportunities to increase trap efficiency, and fish behavior modifications such as the use of sound or light as a method of attracting fish to the RST. Advantages and disadvantages of various modifications and additions to RSTs are provided, as well as an overview of relevant studies and their findings regarding use of the device and trap efficiencies.

5.3.1 Physical Modifications

Diversion Wings

Diversion wings utilized by Thedinga et al. (Thedinga et al. 1994) were fence-like, measuring 5 m in length with 6-mm mesh. These diversion wings were placed in a "V" shape in front of each trap to funnel fish towards the trap entrance (**Figure 18**).

Figure 18. Photograph of rotary screw trap with fence-like, "V"-shaped diversion wings used to funnel fish towards the rotary screw trap (pers. com., J. F. Thedinga, NMFS, 2002).

Advantages

- Was "effective at capturing migrant juvenile salmonids, but overall trap efficiency is affected by river stage, trap placement, and rotation speed, and can vary among species and life stages" (Thedinga et al. 1994)

Disadvantages

- "Small migrants, particularly fry, can become impinged against the cleaning drum, which then expels them along with the debris from the livebox" (Thedinga et al. 1994)
- "Large migrants are able to avoid the trap; therefore, modifications or changes in fishing techniques are necessary to accurately estimate steelhead smolt yield" (Thedinga et al. 1994)
- Requires a narrow location with sufficient current and depth (Thedinga et al. 1994)

Example

Thedinga et al. 1994: Thedinga et al. surveyed juvenile salmonids including coho, sockeye, Chinook, and steelhead in the Situk River, Alaska. The team used two RSTs (one placed upriver,

the other downriver) spaced about 17 km apart from April to August of 1990. At the sampling sites, the river averaged 16 m wide (downriver site) and 24 m wide (upriver site), 1.2-2.4 m deep, with a velocity range of 70-170 cm/s. Both traps, measuring 2.4 m in diameter, were located in the thalweg. The team also built fences (5 m long) in a V shape to funnel fish towards the trap. Mark and recapture tests were conducted at least three days per week throughout the entire study period with up to 1,000 smolts and 1,000 parr for each fish species (steelhead, sockeye salmon, coho salmon, and Chinook salmon). Average trap efficiencies for smolts of each species were 3% for steelhead, 7% for sockeye, 12% for coho, and 24% for Chinook. Based on interpretation of graphs, trap efficiencies ranged from 5-40% for Chinook smolts and 1-15% for steelhead smolts and parr. Overall, trap efficiencies were widely variable. The author suggested that high trap efficiencies may be attributable to trap position and use of diversion wings, while the low efficiencies observed for steelhead could be due to the larger size of the species, resulting in their ability to avoid the traps (pers. com., J. F. Thedinga, NMFS, 2002). Throughout the course of the study, mid-size species were trapped more frequently (Thedinga et al. 1994).

Applicability of modification to the Feather River

The use of diversion wings is a potential mechanism for improving trap efficiency in the Feather River. In a personal communication with the author (pers. com., J. F. Thedinga, NMFS, 2002), Thedinga suggested that the diversion wings significantly improved trap efficiencies. However, prior to installation of the wings, efficiency was not measured and, therefore, quantitative data is not available to assess the percent efficiency gained as a result of adding wings to the RSTs to funnel fish towards the trap. As a result, although diversion wings are potentially applicable to the Feather River, it is not possible to suggest what efficiency gain could be expected by adding wings to RSTs. Because the use of wings would be regarded as largely experimental, and because the benefit has not been quantified at this time, adding wings to the currently utilized RSTs is not recommended as a modification for the next field season.

Ganged RSTs

This method employs multiple RSTs attached to one another in anticipation of fishing a greater proportion of the river, and thereby increasing trap efficiency.

Advantages

- Could potentially double trap efficiency as it would theoretically fish twice as much volume of water as compared to a single RST

Disadvantages

- Would possibly cost twice as much as a single trap
- Would require twice the personnel for maintenance and data collection

Examples

Demko and Cramer 1997,1998a 2000: S. P. Cramer and Associates surveyed juvenile fall-run Chinook salmon in the Stanislaus River at Caswell State Park using two side-by-side RSTs (an additional trap was fished at Oakdale). In 1996, traps were fished continuously from February through July and were checked/cleaned daily. Due to high flows in 1997, traps operated March-June. In 1999, traps operated January-June. To improve efficiency, traps were relocated upstream and a sandbag wall was constructed 10 ft upstream from the traps to divert more flow towards the traps and deflect juveniles into the current. Traps were also moved laterally along the river to improve catch sizes, but numbers of fish caught did not substantially increase. Mark and recapture tests resulted in the following recapture rates:

1996 Range 0%-12.08% (Demko et al. 1997)
1997 Range 1.6%-3.6% (Demko et al. 1998a)
1999 Range 1.57%-3.76% (Demko et al. 2000)

Snider and Titus 1998a, 2000b, 2000c: DFG surveyed Chinook salmon and steelhead trout in the Upper Sacramento River near the town of Knights Landing (RM 89.5).

November 1995-July 1996 – DFG employed two 8 ft RSTs ganged together and anchored to the streambed. The traps were located on the outside of a wide bend in the river. Also, DFG experimented with two 5 ft by 5 ft fyke traps with 30 ft wings and one 8 ft by 30 ft trawl. At the RST location, the river was 20 ft deep, with a velocity of 3.0 ft/s and mean weekly flows of 6,000-29,000 cfs. Traps were serviced twice per day. Trap efficiency was measured by mark and recapture tests with 300 salmonids from each trap. Additional tests utilized six groups of marked hatchery fish from the Coleman National Fish Hatchery (Snider et al. 1998a).

RST efficiency avg. 1.04%; range 0.015-4.6%

September 1996-October 1997 – This was the second year of the above study. DFG employed two 8 ft RSTs ganged together and up to three 5 ft diameter round fyke nets. The authors noted that the RSTs collected substantially more salmonids than the fyke nets. During the surveys, flows ranged 4,520-29,470 cfs (Snider et al. 2000b).

- Efficiency avg. 1.45%; range 0.0-5.4%; SD 1.19%; 80% CI 1.06-1.83%; 17 weeks of evaluation

September 1997-October 1998 – This was the third year of the above study. DFG employed two 8 ft RSTs ganged together from September-June and only one from June-October. During the surveys, flows ranged 3,718-30,260 cfs (Snider et al. 2000c).

- Efficiency avg. 0.80%; range 0.0-4.08%; SD 0.96%; 80% CI 0.53-1.07%; 22 weeks of evaluation

Applicability of modification to the Feather River:

While ganged RSTs would theoretically operate more efficiently than a single RST, trap efficiencies reported by Demko and Cramer (Demko et al. 1997; Demko et al. 1998a; Demko et

al. 2000) and Snider and Titus (Snider et al. 1998a; Snider et al. 2000b; Snider et al. 2000c) were relatively low. Demko and Cramer reported trap efficiencies in the Stanislaus River ranging from 0-12.08% in 1996, 1.6-3.6% in 1997, and 1.57-3.76% in 1999. With current Feather River RST efficiencies averaging 3% and 1.9% at Thermalito and Live Oak, respectively, the ranges of RST efficiencies reported on the Stanislaus are not substantially higher and in some cases are lower, than those reported for the Feather River. In the upper Sacramento River, Snider and Titus reported mean trap efficiencies of 1.04% in 1995/1996, 1.45% in 1996/1997, and 0.8% in 1997/1998. Single Feather River RSTs provide higher efficiencies than the ganged RSTs in the upper Sacramento River. Given the relatively comparable trap efficiencies on the Feather (one RST), Stanislaus and Sacramento Rivers (two RSTs), use of ganged RSTs on the Feather River would not appear to offer a substantial advantage over utilizing single RSTs at multiple trapping locations, as is the current practice. Therefore, using ganged RSTs is not recommended as a modification to the currently utilized RSTs for the next field season.

Multiple RSTs

Advantage

- Allows comparison of catches at different trap locations
- May prove beneficial to rivers with multiple tributaries and varying levels of flow

Disadvantages

- Necessitates maintaining two separate traps at two different locations, adding to personnel requirements

Example

Roper and Scarnecchia 1996: Roper and Scarnecchia surveyed wild and hatchery Chinook salmon smolts in the South Umpqua River, Oregon. They employed three RSTs at different trap positions in high, medium, and low velocities (all in the thalweg). The trap entrance measured 2.43 m in diameter. Trap efficiencies were measured by mark and recapture tests and ranged 23%-27% for wild Chinook and 1%-26% for hatchery Chinook. Trap efficiencies did not differ substantially between trap locations. For hatchery Chinook, however, trap efficiency was significantly reduced at the low velocity position. The authors concluded that behavior influenced trap efficiency (Roper et al. 1996).

Roper and Scarnecchia 1999: Roper and Scarnecchia surveyed Chinook salmon smolts in the South Umpqua River Basin, Oregon from 1991 through 1994. They employed two RSTs of varying sizes in two different locations in the river basin. The first trap was located in the 20 m-wide mainstem and had a 2.44 m diameter entrance, while the smaller trap measured 1.52 m and was stationed in the 15 m-wide Jackson Creek. Trap construction was based on Thedinga's 1994 model (Thedinga et al. 1994). The trap fished continuously from April through July and on weekdays from August through October. Mark and recapture tests demonstrated an average trap efficiency of 15% for both traps throughout the study (Roper et al. 1999).

Applicability of modification to the Feather River

The current RST program to enumerate juvenile steelhead on the Feather River utilizes multiple RSTs, with one placed at Live Oak and the second at Thermalito. This allows comparison of catch and efficiencies at two different geographic locations with different flow regimes. Therefore, continuing to use multiple RSTs is recommended for the next field season.

Conclusions

The physical modifications reviewed included diversion wings, ganged RSTs, and multiple RSTs. Although diversion wings are potentially applicable to the Feather River, the benefit of adding diversion wings to RSTs has not been quantified at this time, and as a result, adding diversion wings to the currently utilized RSTs is not recommended as a modification for the next field season. Because efficiencies reported for ganged RSTs on Stanislaus and Sacramento rivers are comparable to, and in some lower than, trap efficiencies on the Feather River, in which one RST is used at each location, using ganged RSTs is not recommended as a modification to the currently utilized RSTs for the next field season. Multiple RSTs are already in use in the Feather River and continued use of multiple RSTs is recommended for next field season.

5.3.2 Fish Behavior Modifications

Several studies have evaluated methods of controlling fish behavior, either by guiding fish towards a collection device or deterring them away from a turbine. Although several fish senses could potentially be manipulated, light and sound devices are the focus of this review. In general, the research presented below contains studies that were performed in highly controlled laboratory settings and offer little in the way of results directly applicable to field settings. Additionally, these studies were not designed for the purpose of investigating how these modifications could be used to increase trap efficiencies of RSTs. In some cases, the authors themselves have acknowledged the limitations of their respective studies and have encouraged further research prior to widespread adoption of their methodologies. Having said this, their observations and preliminary findings do provide a useful framework for exploring behavioral devices and support further research in this field.

Sound

Abbott 1972: Abbott and his team planted 13,000 pond-reared rainbow trout in a man-made pond at the Big Beef Creek field station on Hood Canal, WA. The pond measured 0.25 acre in surface area and 10 ft deep. An underwater transducer emitted a nonpulsed 150 Hz tone just before and during feeding. Trials were conducted 1-4 times a day for 56 days. Fish were successfully conditioned to aggregate around the acoustic source. Abbott cautions the reader to evaluate his results carefully because of the "few observations involved and the lack of experimental controls" (Abbott 1972).

Ploskey et al. 2000: Ploskey and his team conducted evaluations in June 1995 to determine if sound could be used to guide fish away from turbines at the Bonneville Dam on the Columbia River, OR. The team utilized subyearling and yearling Chinook, yearling coho, steelhead, and sockeye. They used "122 m long array of 25 low frequency sound transducers." Sounds were "300 Hz and 400 Hz frequencies transmitted as 2 s crescendos." Results indicated that the frequency of turbine avoidance did not differ significantly with or without sound. In this study, 300 Hz and 400 Hz frequencies did not influence fish behavior (Ploskey et al. 2000).

Light

Wickham 1973: The NMFS conducted a study in the Gulf of Mexico during September and October 1970 to evaluate light as an influence on fish behavior. Coastal pelagic fishes (striped anchovy, scaled sardine, blue runner, and thread herring) were successfully led up to 20 m by an underwater 1000-watt mercury vapor lamp (Wickham 1973).

Sager et al. 1985: Sager and his team tested juvenile Atlantic menhaden for light preferences. They used a glass-bottomed, plywood test trough with multiple projectors that displayed three different wavelengths of light (0.1, 0.2, and 0.4 $\mu E/m^2s$). Results indicated "the number of occurrences in the 460-540 nm range increased greatly at the higher intensities (0.2 and 0.4 $\mu E/m^2s$)" (Sager et al. 1985).

Nemeth and Anderson 1992: Nemeth and Anderson experimented with hatchery-reared coho and Chinook at the University of Washington fish hatchery. Trials were conducted day and night during April-June 1987 in an outdoor, cement raceway. The team used video cameras to record fish activity when exposed to strobe and mercury vapor lights. Four variations were tested: 1) normal day, 2) normal night, 3) reversed day (daytime tests with fish adapted to the dark), and 4) reversed night (nighttime tests with fish adapted to the light). Results indicated that both coho and Chinook avoided strobe and full-intensity mercury light; however, Chinook were attracted to dim mercury light. Additionally, at night under normal conditions, both species increased their activity by 90% when exposed to mercury light. The authors emphasized the experimental nature of their study and the difference between laboratory and field results. They state, "It would be ideal if the behaviors we observed in the laboratory could also be seen in the field. Because of the extreme logistic difficulties in such a study, no researcher (to date) has been able to see exactly how fishes behave in front of a turbine intake" (Nemeth et al. 1992).

General use of behavioral devices

Popper and Carlson 1998: – Popper and Carlson collaborated on a literature review of behavioral devices currently in use and offered their insight as to the current status of this line of research. They concede that past efforts have offered some preliminary direction for future operational use, but that most of the studies are largely experimental. They state, "although avoidance or attraction responses have been observed with a variety of stimuli at both laboratory and field scales, these have yet to be evaluated operationally" (Popper et al. 1998). The authors recommend further research before behavioral devices are adopted for widespread use (Popper et al. 1998).

Conclusions

Studies exploring the potential for use of behavioral devices, including light and sound, stress the experimental nature of the conducted research and also stress the potential lack of applicability of laboratory result to the field environment. Additionally, a general review of use of behavioral devices (Popper et al. 1998) suggests that the use of behavioral devices such as light and sound as potential fish attractants have not been sufficiently evaluated to recommend them for operational functionality. As a result, the use of light and sound to attract fish to RSTs should be regarded as largely experimental and is not recommended for incorporation into the Feather River RST program until further scientific evidence indicates the benefits associated with use of light and sound as attractants for devices such as RSTs.

6.0 CONCLUSIONS

This literature review has detailed juvenile enumeration devices considered for use on the Feather River. Alternative devices were assessed, trap efficiencies for rotary screw traps (with and without modifications) were evaluated, and finally RST modifications including physical modifications and fish behavior modifications were explored. This investigation concludes that: (1) no device or method examined would be expected to provide a more accurate, precise, or consistent estimation of the number of emigrating juvenile steelhead in the mainstem Feather River than the currently utilized RSTs; (2) the Feather River RST efficiencies are comparable to, and in some cases higher than, RST efficiencies in other rivers; (3) physical RST modification alternatives such as addition of diversion wings to RSTs may provide some efficiency improvement, but the methods are experimental and the benefit of adding wings has not been quantified; and (4) behavioral modifications based on sound and light do not appear to be well developed enough to provide additional benefit for use with RSTs.

7.0 REFERENCES

Abbott, R. R. 1972. Induced Aggregation of Pond-Reared Rainbow Trout (*Salmo Gairdneri*) Through Acoustic Conditioning. Transactions of the American Fisheries Society 101:35-43.

Appleby, A. E. and J. M. Tipping. 1991. Use of Electronic Fish Counters for Coho and Chinook Salmon, Steelhead, and Cutthroat Trout Smolts. The Progressive Fish-Culturist 53:195-198.

Beamish, R. J., D. McCaughran, J. R. King, R. M. Sweeting, and G. A. McFarlane. 2000. Estimating the Abundance of Juvenile Coho Salmon in the Strait of Georgia by Means of Surface Trawls. North American Journal of Fisheries Management 20:369-375.

Brandt, S. B. 1996. Chapter No. 13. Acoustic Assessment of Fish Abundance and Distribution *in* Fisheries Techniques. 2nd Edition. Murphey, B. R. and Willis, D. W. (ed.), Bethesda, Maryland: American Fisheries Society, 385-432.

Cavallo, B. DWR. Personal Communication. December 12, 2002.

Conlin, K. and B. D. Tutty. 1979. Juvenile Salmonid Field Trapping Manual. Report # 1530. Canada Fisheries and Marine Service Manuscript Report.

Czajkowski, S. P., D. W. Coble, F. A. Copes, R. Bruch, K. Kamke, and P. J. Peeters. 1996. Lower Returns of Tagged Walleyes Initially Caught by Trawling Than by Trap Nets, Fyke Nets, or Electroshocking. North American Journal of Fisheries Management 16:453-456.

Daum, D. W. and B. M. Osborne. August, 1998. Use of Fixed-Location, Split-Beam Sonar to Describe Temporal and Spatial Patterns of Adult Chum Salmon Migration in the Chandalar River, Alaska. North American Journal of Fisheries Management 18:477-486.

Davis, S. K., J. L. Congleton, and R. W. Tyler. 1980. Modified Fyke Net for the Capture and Retention of Salmon Smolts in Large Rivers. The Progressive Fish-Culturist 42:235-237.

Demko, D. B. and S. P. Cramer. 1993. Effects of Pulse Flows on Juvenile Chinook Migration in the Stanislaus River. Gresham, OR: S. P. Cramer & Associates, Inc.

Demko, D. B. and S. P. Cramer. 1995. Effects of Pulse Flows on Juvenile Chinook Migration in the Stanislaus River. Gresham, OR: S. P. Cramer & Associates, Inc.

Demko, D. B. and S. P. Cramer. 1996. Effects of Pulse Flows on Juvenile Chinook Migration in the Stanislaus River. Gresham, OR: S. P. Cramer & Associates, Inc.

Demko, D. B. and S. P. Cramer. 1997. Outmigrant Trapping of Juvenile Salmonids in the Lower Stanislaus River Caswell State Park Site 1996. Gresham, OR: S. P. Cramer & Associates, Inc.

Demko, D. B. and S. P. Cramer. 1998a. Outmigrant Trapping of Juvenile Salmonids in the Lower Stanislaus River Caswell State Park Site 1997. Gresham, OR: S. P. Cramer & Associates, Inc.

Demko, D. B., C. Gemperle, A. Philips, and S. P. Cramer. 2000. Outmigrant Trapping of Juvenile Salmonids in the Lower Stanislaus River Caswell State Park Site 1999. Gresham, OR: S. P. Cramer & Associates, Inc.

Demko, D. B., C. Gemperle-Bacon, and S. P. Cramer. 1998b. Effects of Pulse Flows on Juvenile Chinook Migration in the Stanislaus River, 1998 Annual Report. Gresham, OR: S.P. Cramer & Associates, Inc.

DFG. 1955. Studies on the Downstream Migration of Young Salmon in the Feather River 1955. Sacramento, CA: California Department of Fish and Game.

DFG. 1961a. Campbell Creek (South Fork Ten Mile River Tributary) Stream Survey. CDFG unpublished file memo by S. N. Nye. Yountville, CA:

DFG. 1961b. Smith Creek (South Fork Ten Mile River Tributary) Stream Survey. CDFG unpublished file memo by W. E. Jones. Yountville, CA:

DFG. 1961c. South Fork Ten Mile River (Ten Mile River Tributary) Stream Survey. CDFG unpublished file memo by S. N. Nye. Yountville, CA:

Dolloff, A., J. Kershner, and R. Thurow. 1996. Chapter No. 18. Underwater Observation *in* Fisheries Techniques. Second Edition. Murphy, B. R. and Willis, D. W. (ed.), Bethesda, Maryland: American Fisheries Society, 533-554.

DuBois, R. B., J. E. Miller, and S. D. Plaster. 1991. An Inclined-Screen Smolt Trap With Adjustable Screen for Highly Variable Flows. North American Journal of Fisheries Management 11:155-159.

DWR. 1982. Feather River Spawning Gravel Baseline Study.

DWR. August 1983. Concerning the Operation of the Oroville Division of the State Water Project for Management of Fish and Wildlife: Agreement Between the California Department of Water Resources and the California Department of Fish and Game.

DWR. 2000. 1999 Lake Oroville Annual Report of Fish Stocking and Fish Habitat Improvements. Report # FERC Project No. 2100-054.

DWR. January, 2001. Initial Information Package. Relicensing of the Oroville Facilities. Federal Energy Regulatory Commission License Project No. 2100.

DWR. 2002a. Distribution of Fishes in the Lower Feather River in Relation to Season and Temperature, 1997-2001.

DWR. 2002b. Emigration of Juvenile Chinook Salmon in the Feather River, 1998-2001. Sacramento, CA: Department of Water Resources, Division of Environmental Services.

DWR. 2002c. Unpublished Data.

Hartman, K. J., B. Nagy, R. C. Tipton, and S. Morrison. November, 2000. Verification of Hydroacoustic Estimates of Fish Abundance in Ohio River Lock Chambers. North American Journal of Fisheries Management 20:1049-1056.

Hatch, D. R., M. Schwartzberg, and P. R. Mundy. 1994. Estimation of Pacific Salmon Escapement With a Time-Lapse Video Recording Technique. North American Journal of Fisheries Management 14:626-635.

Hayes, D. B., C. P. Ferreri, and W. W. Taylor. 1996. Chapter No. 7. Active Fish Capture Methods *in* Fisheries Techniques. Second Edition. Murphy, B. R. and Willis, D. W. (ed.), Bethesda, Maryland: American Fisheries Society, 193-220.

Hill, K. A. and J. D. Webber. 1999. Butte Creek Spring-Run Chinook Salmon, *Oncorhynchus Tshawytscha*, Juvenile Outmigration and Life History 1995-1998. Report # 99-5. Inland Fisheries Administrative Report. California Department of Fish and Game.

Irvine, J. R., B. R. Ward, P. A. Teti, and N. B. F. Cousens. 1991. Evaluation of a Method to Count and Measure Live Salmonids in the Field With a Video Camera and Computer. North American Journal of Fisheries Management 11:20-26.

Jones, M. L. and J. D. Stockwell. 1995. A Rapid Assessment Procedure for the Enumeration of Salmonine Populations in Streams. North American Journal of Fisheries Management 15:551-562.

Kennen, J. G., S. J. Wisniewski, N. H. Ringler, and H. M. Hawkins. 1994. Application and Modification of an Auger Trap to Quantify Emigrating Fishes in Lake Ontario Tributaries. North American Journal of Fisheries Management 14:828-836.

Kindopp, J. DWR. Personal Communication. 2002.

Leider, S. A., M. W. Chilcote, and J. J. Loch. 1986. Movement and Survival of Presmolt Steelhead in a Tributary and the Main Stem of a Washington River. North American Journal of Fisheries Management 6:526-531.

Lister, D. B., R. A. L. Harvey, and C. E. Walker. 1969. A Modified Wolf Trap for Downstream Migrant Young Fish Enumeration. The Canadian Fish Culturist 40:57-60.

Maahs, M. 1996. 1996 South Fork Ten Mile River and Little North Fork Noyo Outmigrant Trapping. Salmon Trollers Marketing Association.

MacLennan D.N. and Simmonds E.J. 1992. Fisheries Acoustics. London: Chapman and Hall,

McMenemy, J. R. and B. Kynard. 1988. Use of Inclined-Plane Traps to Study Movement and Survival of Atlantic Salmon Smolts in the Connecticut River. North American Journal of Fisheries Management 8:481-488.

Meehan, W. R. 1964. A Modified Scoop Trap for Sampling Downstream-Migrant Salmon in Turbid Glacial Rivers. The Progressive Fish-Culturist 26:42-46.

Meinz, M. DFG. Personal Communication. 2002.

Milner, A. and L. Smith. 1985. Fyke Nets Used in a Southeastern Alaskan Stream for Sampling Salmon Fry and Smolts. North American Journal of Fisheries Management 5:502-506.

Miyamoto, J. J. and R. D. Hartwell. 2001. Population Trends and Escapement Estimation of Mokelumne River Fall-Run Chinook Salmon (*Oncorhynchus Tshawytscha*). Report # Volume 2. Contributions to the Biology of Central Valley Salmonids. Fish Bulletin 179. California Department of Fish and Game.

Nemeth, R. S. and J. J. Anderson. 1992. Response of Juvenile Coho and Chinook Salmon to Strobe and Mercury Vapor Lights. North American Journal of Fisheries Management 12:684-692.

Newcomb, T. J. and T. G. Coon. 1997. Evaluation of Alternate Methods for Estimating Numbers of Outmigrating Steelhead Smolts. Report # Fisheries Research Report No. 2045. Michigan Department of Natural Resources, Fisheries Division.

NMFS. March 19, 1998. Final Rule: Notice of Determination. Endangered and Threatened Species: Threatened Status for Two ESUs of Steelhead in Washington, Oregon, and California. Federal Register 63:(53) 13347-13371.

Painter, R. E. and L. H. Wixom. 1975. Oroville Project Fish Investigation Program. Draft Final Report (1968-1975). California Department of Fish and Game.

Painter, R. E., L. H. Wixom, and S. N. Taylor. 1977. An Evaluation of Fish Populations and Fisheries in the Post-Oroville Project Feather River: A Report Submitted to the Department of Water Resources in Accordance With Federal Power Commission License No. 2100. California Department of Fish and Game.

Parsley M.J., D. E. Palmer, and R. W. Burkhardt. 1989. Variations in Capture Seine Efficiency of a Beach Seine for Small Fishes. North American Journal of Fisheries Management 9:239-244.

Pierce, C. L., J. B. Rasmussen, and W. C. Leggett. 1990. Sampling Littoral Fish With a Seine: Corrections for Variable Capture Efficiency. Canadian Journal of Fisheries and Aquatic Sciences 47:1004-1010.

Ploskey, G. R., P. N. Johnson, and T. J. Carlson. 2000. Evaluation of a Low-Frequency Sound-Pressure System for Guiding Juvenile Salmon Away From Turbines at Bonneville Dam, Columbia River. North American Journal of Fisheries Management 20:951-967.

Popper, A. N. and T. J. Carlson. 1998. Application of Sound and Other Stimuli to Control Fish Behavior. Transactions of the American Fisheries Society 127:673-707.

Roper, B. and D. L. Scarnecchia. 1996. A Comparison of Trap Efficiencies for Wild and Hatchery Age-0 Chinook Salmon. North American Journal of Fisheries Management 16:214-217.

Roper, B. and D. L. Scarnecchia. 1999. Emigration of Age-0 Chinook Salmon (*Oncorhynchus Tshawytscha*) Smolts From the Upper South Umpqua River Basin, Oregon, U.S.A. Canadian Journal of Fisheries and Aquatic Sciences 56:939-946.

Sager, D. R., C. H. Hocutt, and J. R. Stauffer Jr. 1985. Preferred Wavelengths of Visible Light for Juvenile Atlantic Menhaden. North American Journal of Fisheries Management 5:72-77.

Seelbach, P. W. 1993. Population Biology of Steelhead in a Stable-Flow, Low-Gradient Tributary of Lake Michigan. Transactions of the American Fisheries Society 122:179-198.

Seelbach, P. W., R. N. Lockwood, and G. R. Alexander. 1985. A Modified Inclined-Screen Trap for Catching Salmonid Smolts in Large Rivers. North American Journal of Fisheries Management 5:494-498.

Shardlow, T., R. Hilborn, and D. Lightly. 1987. Components Analysis of Instream Escapement Methods for Pacific Salmon (*Oncorhynchus Spp.*). Canadian Journal of Fisheries and Aquatic Sciences 44:1031-1037.

Smith-Root. Accessed on January 17, 2003. Fish Counters. Available at http://www.smith-root.com/counters/sr1601_counter_accessories.html

Snider, W. M. 1992. Emigration Survey Lower American River 1992. Stream Flow and Habitat Evaluation Program. California Department of Fish and Game, Environmental Services Division.

Snider, W. M. and R. G. Titus. 1995. Lower American River Emigration Survey, November 1993 - July 1994. Report # Technical Report No. 95-3. Department of Fish and Game.

Snider, W. M. and R. G. Titus. 1998a. Evaluation of Juvenile Anadromous Salmonid Emigration in the Sacramento River Near Knights Landing November 1995 - July 1996. Department of Fish and Game, Environmental Services Division.

Snider, W. M. and R. G. Titus. 2000a. Lower American River Emigration Survey, October 1996-September 1997. Report # Stream Evaluation Program Technical Report No. 00-2. California Department of Fish and Game.

Snider, W. M. and R. G. Titus. 2000b. Timing, Composition, and Abundance of Juvenile Anadromous Salmonid Emigration in the Sacramento River Near Knights Landing October 1996 - September 1997. Report # Stream Evaluation Program Technical Report No. 00-04. Department of Fish and Game, Habitat Conservation Division.

Snider, W. M. and R. G. Titus. 2000c. Timing, Composition, and Abundance of Juvenile Anadromous Salmonid Emigration in the Sacramento River Near Knights Landing October 1997 - September 1998. Report # Stream Evaluation Program Technical Report No. 00-05. Department of Fish and Game, Habitat Conservation Division.

Snider, W. M. and R. G. Titus. 2001. Lower American River Emigration Survey, October 1997 - September 1998. Report # Technical Report No. 01-6. Department of Fish and Game.

Snider, W. M. and R. G. Titus. 2002. Lower American River Juvenile Salmonid Emigration Survey, October 1998 - September 1999. Report # Technical Report No. 02-2. Department of Fish and Game.

Snider, W. M., R. G. Titus, and B. A. Payne. 1997. Lower American River Emigration Survey, November 1994-September 1995. California Department of Fish and Game.

Snider, W. M., R. G. Titus, and B. A. Payne. 1998b. Lower American River Emigration Survey, October 1995-September 1996. Report # Stream Evaluation Program Technical Report No. 98-6. California Department of Fish and Game.

Sommer, T., D. McEwan, and R. L. Brown. 2001. Factors Affecting Chinook Salmon Spawning in the Lower Feather River. Department of Water Resources, 269-297.

Thedinga, J. F. NMFS. Personal Communication. 2002.

Thedinga, J. F., M. L. Murphy, S. W. Johnson, J. M. Lorenz, and K. V. Koski. 1994. Determination of Salmonid Smolt Yield With Rotary-Screw Traps in the Situk River, Alaska, to Predict Effects of Glacial Flooding. North American Journal of Fisheries Management 14:837-851.

Todd, G. L. 1994. A Lightweight, Inclined-Plane Trap for Sampling Salmon Smolts in Rivers. Alaska Fishery Research Bulletin 1:168-175.

Todd, I. S. 1966. A Technique for the Enumeration of Chum Salmon Fry in the Fraser River, British Columbia. The Canadian Fish Culturist 38:3-35.

Tyler, R. W. 1979. Method of Sampling Seaward Migrations of Juvenile Salmon. The Progressive Fish-Culturist 41:78-81.

Unger, P. A. and S. B. Brandt. 1989. Seasonal and Diel Changes in Sampling Conditions for Acoustic Surveys of Fish Abundance in Small Lakes. Fisheries Research 7:353-366.

USFWS, C. D. Martin, P. D. Gaines, and R. R. Johnson. 2001. Estimating the Abundance of Sacramento River Juvenile Winter Chinook Salmon With Comparisons to Adult Escapement. Report # Volume 5. Red Bluff Research Pumping Plant Report Series. Red Bluff, CA: U. S. Fish and Wildlife Service.

Wickham, D. A. 1973. Attracting and Controlling Coastal Pelagic Fish With Nightlights. Transactions of the American Fisheries Society 4:816-825.

Wolf, P. 1950. A Trap for the Capture of Fish and Other Organisms Moving Downstream. Transactions of the American Fisheries Society 80:41-45.

Yule, D. L. August, 2000. Comparison of Horizontal Acoustic and Purse-Seine Estimates of Salmonid Densities and Sizes in Eleven Wyoming Waters. North American Journal of Fisheries Management 20:759-775.

8.0 LIST OF PREPARERS

- Paul Bratovich, Principal, SWRI - Fisheries Technical Lead
- David Olson, Senior Environmental Scientist, SWRI - Project Manager
- Allison Niggemyer, Associate Environmental Scientist, SWRI - author
- Sarah Henningsen, Environmental Planner, SWRI – author

- Gina Veronese, Environmental Planner, SWRI – author